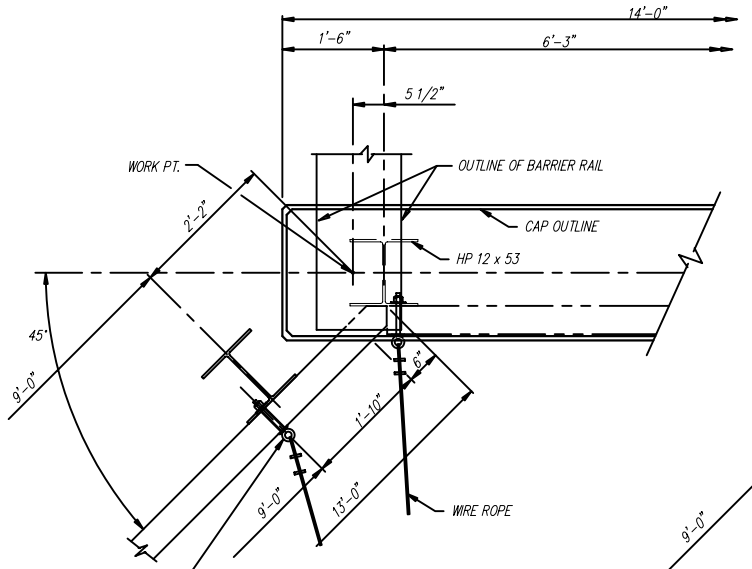

DETAIL "A"

NOTE: BOLT ALL PANELS TO PILING WITH 3/4" Ø x 8" MACHINE BOLTS EXCEPT WHERE EYE-BOLTS ARE USED. 2 ~ STANDARD WASHERS REQ'D.

NOTE: AT THE POINT WHERE PRECAST CONCRETE PANELS COME IN CONTACT WITH PILING A PROTECTIVE COATING TO THE PILING SHALL BE APPLIED.

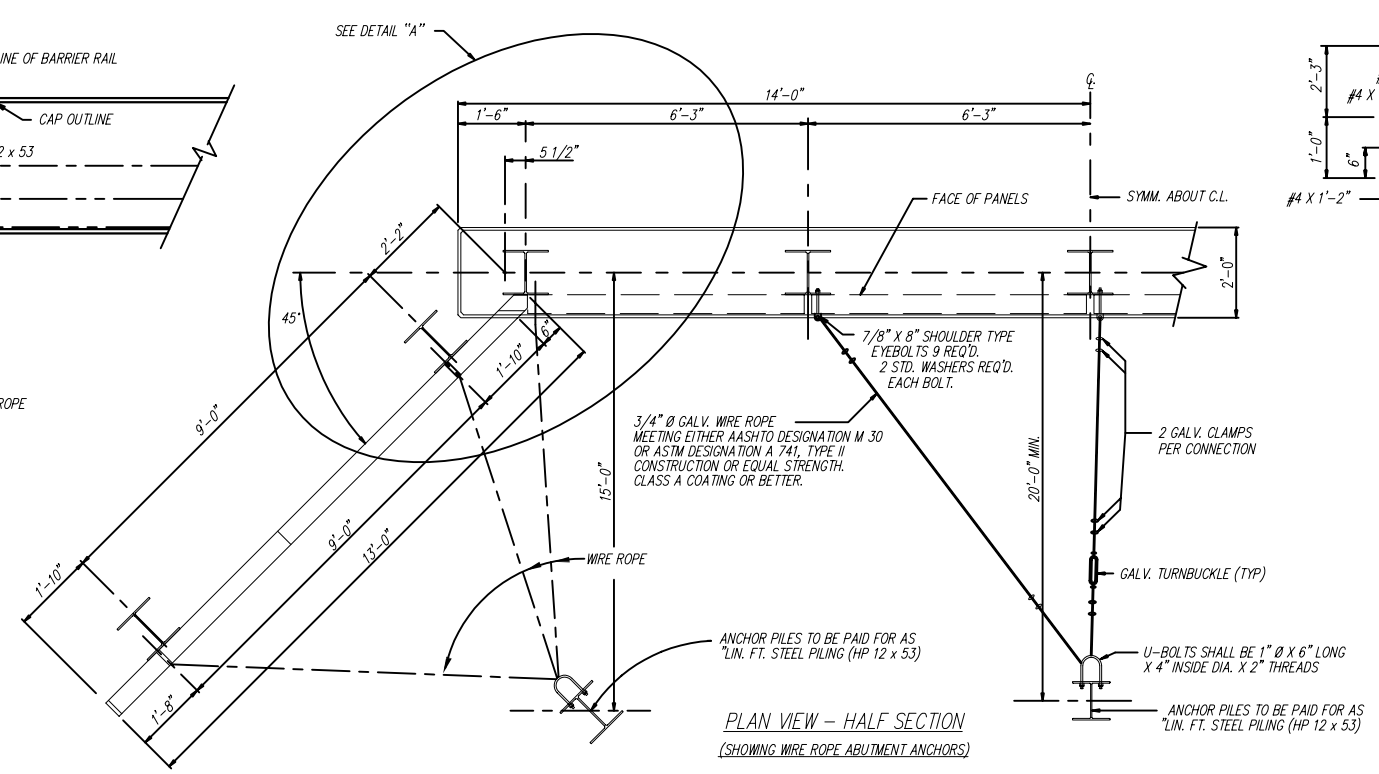

PLAN VIEW – HALF SECTION

(SHOWING WIRE ROPE ABUTMENT ANCHORS)

* NOTE: WHEN USED WITH 40' SPAN BRIDGE CHANGE TO 3'-6".

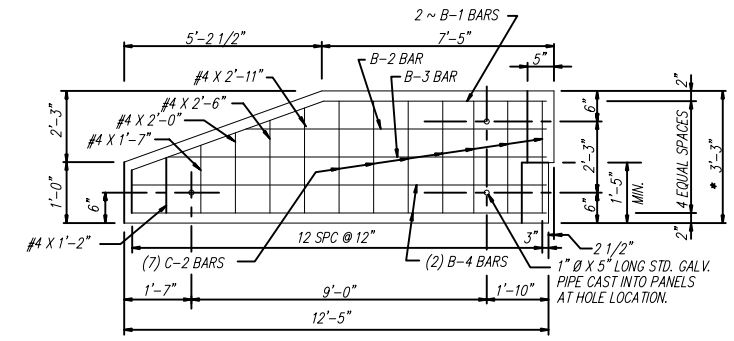

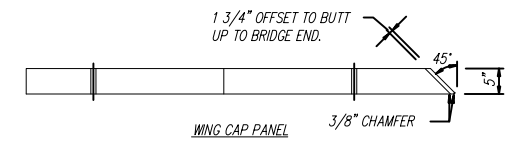

WING CAP PANEL

GENERAL NOTES

SPECIFICATIONS:
AASHTO STANDARD SPECIFICATIONS FOR HIGHWAY BRIDGES
AASHTO STANDARD SPECIFICATIONS FOR TRANSPORTATION MATERIALS
AMERICAN SOCIETY FOR TESTING AND MATERIALS

CONCRETE:
CONCRETE SHALL CONFORM TO AASHTO CLASS AE WITH A MINIMAL 28 DAY BREAKING STRENGTH OF 3000 PSI. ALL EXPOSED CORNERS SHALL BE ROUNDED TO A 1/4" RADIUS UNLESS OTHERWISE NOTED.

REINFORCING:
ALL REINFORCING STEEL SHOULD BE ACCURATELY LOCATED IN THE FORMS AND FIRMLY HELD IN PLACE. REINFORCING STEEL SHALL MEET THE REQUIREMENTS OF THE APPROPRIATE SECTION OF AASHTO M31, AASHTO M32, AASHTO M221 OR AASHTO M225.
REINFORCING DIMENSIONS ARE TO THE ℄'S OF BARS UNLESS OTHERWISE NOTED.
THE ABOVE STEEL WILL NOT BE PAID FOR DIRECTLY, BUT WILL BE CONSIDERED AS SUBSIDIARY TO THE ITEM OF PRECAST CONCRETE ABUTMENT PANELS.

HARDWARE:
ALL MACHINE BOLTS CONNECTING CONCRETE ABUTMENT PANELS TO PILING SHALL BE CONSIDERED INCIDENTAL TO THE WORK.
ALL BOLTS SHALL CONFORM TO ASTM A-307 AND BE GALVANIZED IN ACCORDANCE WITH ASTM A-153.

BID ITEMS:
_____ PRECAST CONCRETE ABUTMENT PANELS, TYPE _____ – EACH.
_____ PRECAST CONCRETE WING PANELS TYPE _____ – EACH.
_____ PRECAST CONCRETE ABUTMENT WING CAP PANELS – EACH.
_____ WIRE ROPE ABUTMENT ANCHOR ASSEMBLY – PER EACH.

DESIGN DATA:
fc = 1200 PSI ; fs = 24,000 PSI ; N = 10

NOTE!! IN CASTING PANELS (ABUTMENT, WING, WING CAP) , WIRE MESH CONFORMING TO THE REQUIREMENTS OF AASHTO M221 OR AASHTO M225 MAY BE USED IN LIEU OF THE REINFORCEMENT SHOWN. TWO LAYERS OF MESH SHALL BE USED IN EACH PANEL AND BE LOCATED WITH 1" CLEAR OF THE SIDE OF THE PANEL. THE WIRE CONFIGURATION MUST BE SUCH THAT A MINIMUM STEEL AREA OF .30 SQ. IN. PER FOOT IN THE LINE WIRE DIRECTION AND .20 SQ. IN. PER FOOT IN THE CROSS WIRE DIRECTION IS ACQUIRED.

NOTE!! PANELS OF DIFFERENT HEIGHTS THAN THOSE SHOWN MAY BE CAST. STEEL REQUIREMENTS AND CLEARANCES SHOWN HEREON MUST BE MAINTAINED.

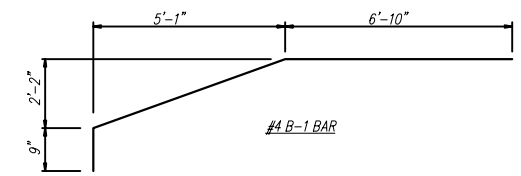

#4 B-1 BAR

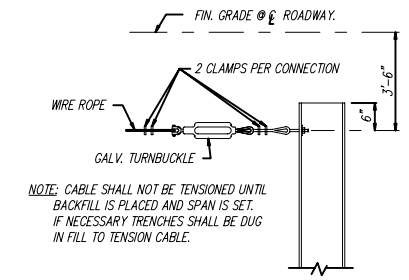

NOTE: CABLE SHALL NOT BE TENSIONED UNTIL BACKFILL IS PLACED AND SPAN IS SET. IF NECESSARY TRENCHES SHALL BE DUG IN FILL TO TENSION CABLE.

PART ELEVATION OF PILE ANCHOR

NOTE: THE CONTRACTOR SHALL HAVE THE OPTION OF ATTACHING THE TURNBUCKLE DIRECTLY TO THE U-BOLT ON THE ANCHOR PILE.

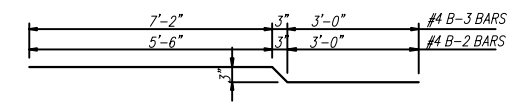

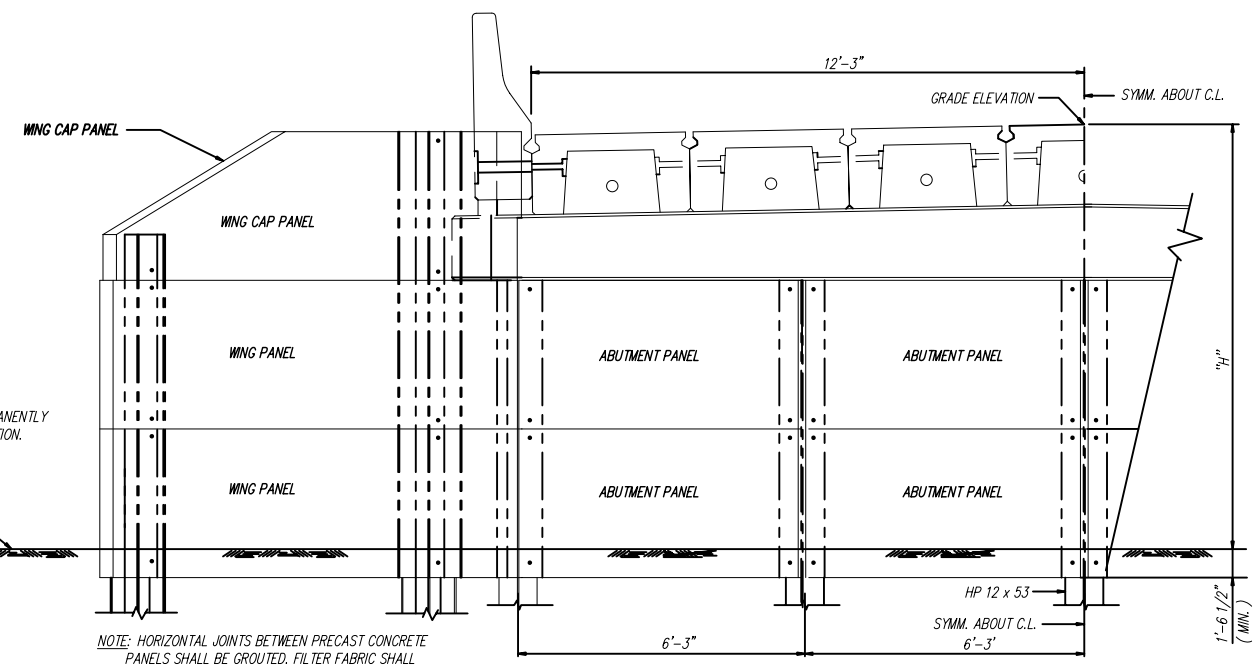

NOTE: FACE OF PANELS SHALL BE PERMANENTLY MARKED BY FABRICATOR FOR ERECTION.

NOTE: HORIZONTAL JOINTS BETWEEN PRECAST CONCRETE PANELS SHALL BE GROUTED. FILTER FABRIC SHALL BE PLACED BETWEEN FILL AND JOINTS.

NOTE: HOLES TO BE DRILLED IN PILES FOR ATTACHING CONCRETE PANELS.

HALF ELEVATION

2'-0"	C-1 BARS #4
3'-0"	C-2 BARS #4
4'-0"	C-3 BARS #4
8'-0"	C-6 BARS #4
5'-10"	D BARS #4

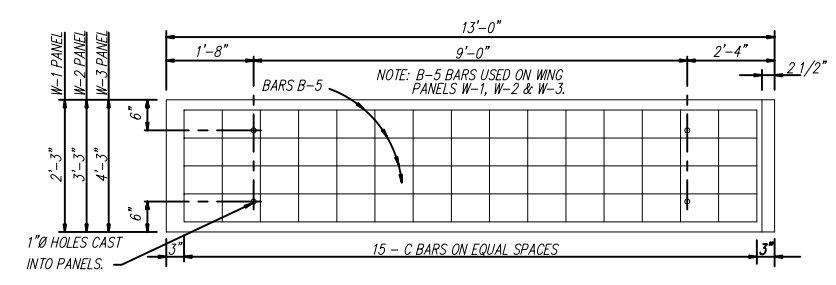

NOTE: TYPICAL INSTALLATION OF B-2, B-3, B-4 & B-5 BARS

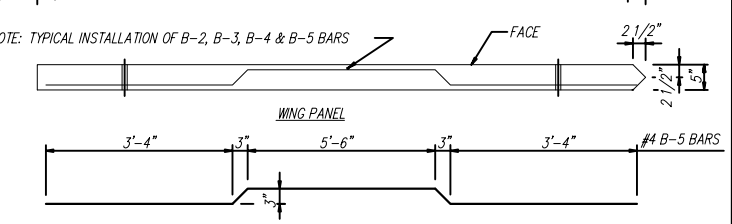

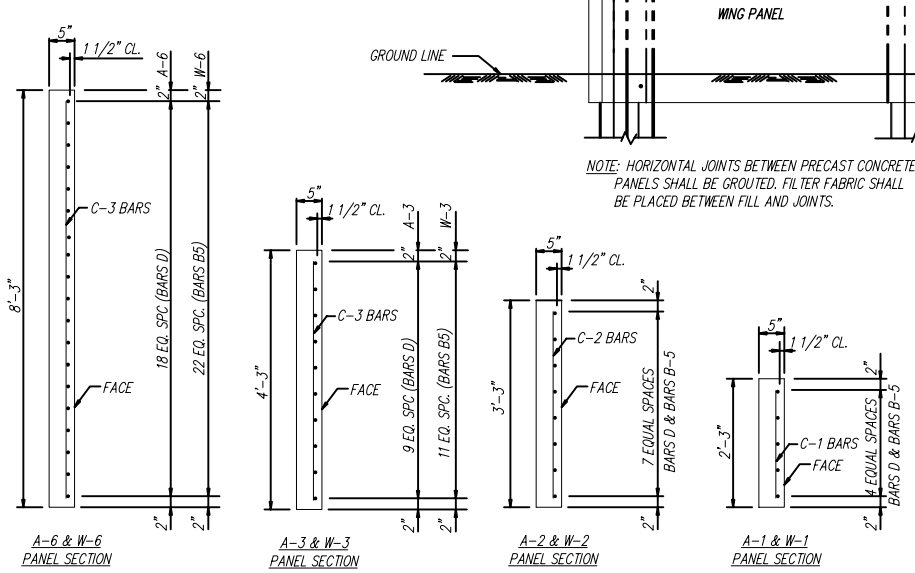

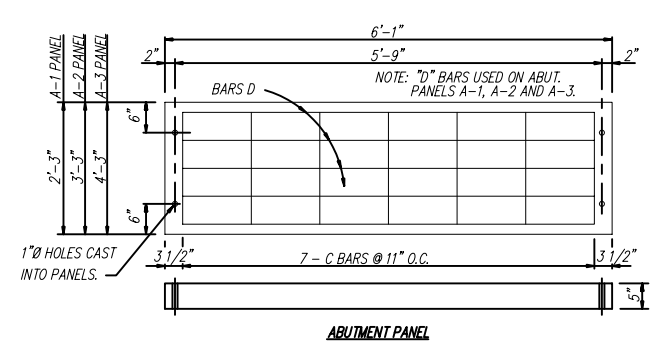

ABUTMENT PANEL

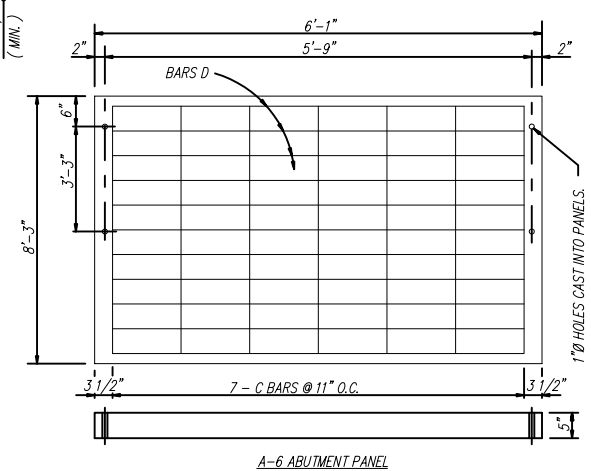

A-6 ABUTMENT PANEL

CONECUH BRIDGE & ENGINEERING, LLC
P. O. Box 129
Troy, Alabama 36081
249 County Rd. 2227
Troy, Alabama 36079
334-566-7422

PRECAST CONCRETE ABUTMENT PANELS
FOR USE WITH 24', 34' & 40'
PRECAST CONCRETE SPANS
24'-0" & 24'-6" CLEAR ROADWAY AND STEEL PILING

DATE: 7/18/03

STANDARD DWG. NO. PCP-2400

SHEET NO. 1 OF 1