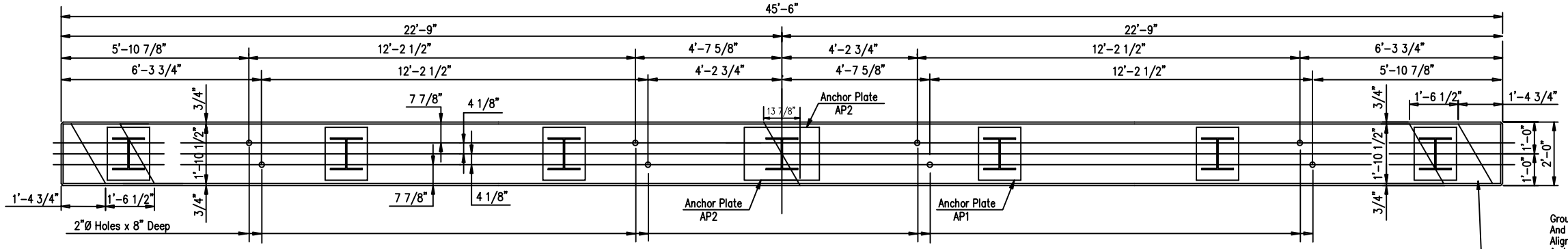

NOTE: ANY GRINDING OR LEVELING ON THE TOP SURFACE OF THE RISER OR CAP THAT MAY BE REQUIRED TO INSURE PROPER SEATING OF THE BARRIER RAIL AND PRECAST CHANNEL SHALL BE PERFORMED BY THE CONTRACTOR AT NO ADDITIONAL COST TO THE PROJECT.

NOTE:
LEFT AHEAD BRIDGE AS SHOWN
RIGHT AHEAD BRIDGE OPP. HAND

PLAN – SPLIT INTERMEDIATE BENT

** DEPTH OF RISER BLOCK	
32' SPAN	4"
40' SPAN	7"

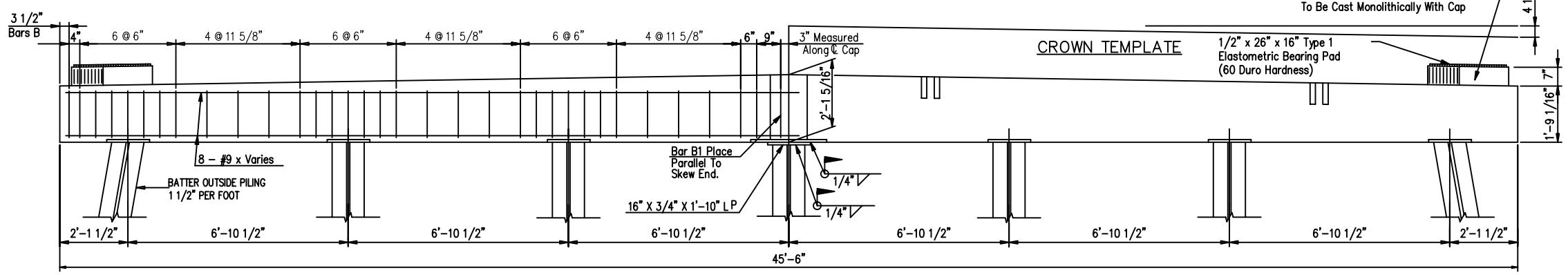

CROWN TEMPLATE

1/2" x 26" x 16" Type 1 Elastometric Bearing Pad (60 Duro Hardness)

ELEVATION – SPLIT INTERMEDIATE BENT

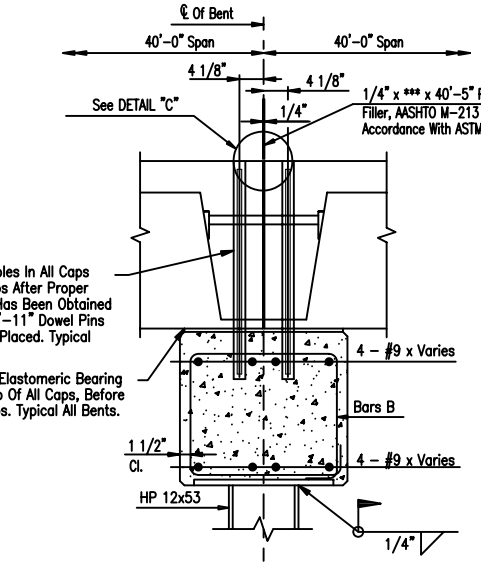

*** PREFORMED EXP. JT. FILLER	
32' SPAN	1/4" x 20" x 40'-5"
40' SPAN	1/4" x 23" x 40'-5"

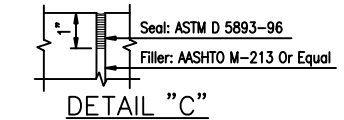

DETAIL "C"

TYPICAL SECTION

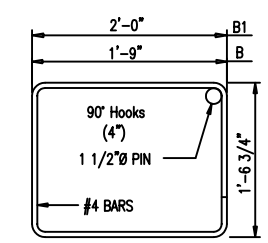

BARS B – #4
Dimensions Are Out To Out

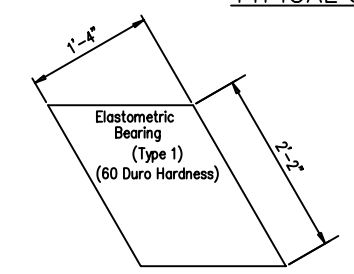

** BEARING PADS

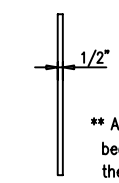

** A ½" x 8" x 2'-2" elastomeric bearing, Type 1, shall be used under the outside leg of the exterior channels.

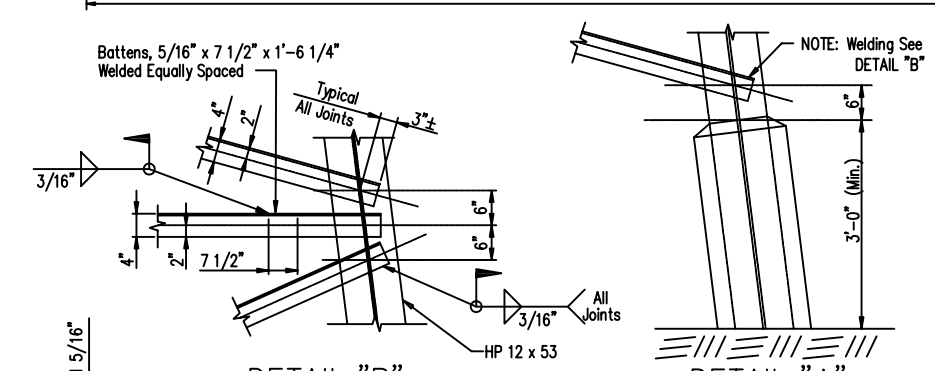

DETAIL "B"

DETAIL "A"

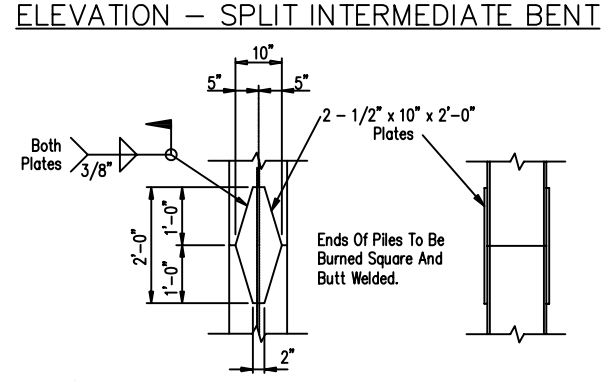

PILE SPLICE DETAIL

NOTE: THIS CAP MAY BE CAST AS A ONE PIECE CAP.

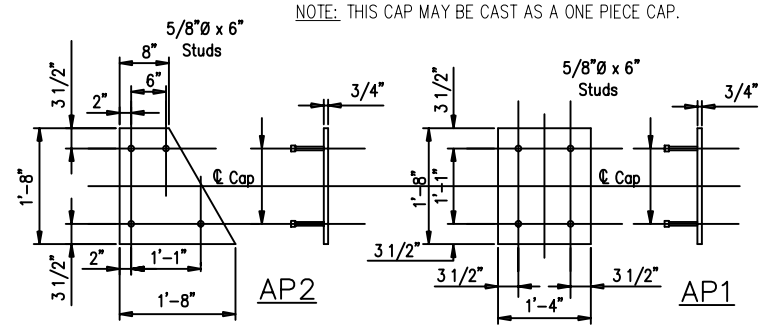

ELEVATION PLAN ELEVATION

ANCHOR PLATE ASSEMBLIES

GENERAL NOTES:

SPECIFICATIONS:
AASHTO STANDARD SPECIFICATIONS FOR HIGHWAY BRIDGES
AASHTO STANDARD SPECIFICATIONS FOR TRANSPORTATION MATERIALS
AMERICAN SOCIETY FOR TESTING AND MATERIALS
AMERICAN INSTITUTE OF STEEL CONSTRUCTION

DESIGN LOADING: A.A.S.H.T.O. HS 20-44

CONCRETE: CONCRETE SHALL CONFORM TO AASHTO CLASS A. MINIMUM 28 DAY COMPRESSIVE STRENGTH SHALL BE 3000 PSI. ALL EXPOSED CORNERS TO BE CHAMFERED 3/4" X 45° UNLESS OTHERWISE NOTED.

REINFORCING STEEL: AILL REINFORCING STEEL SHALL BE GRADE 60 BILLET STEEL MEETING THE REQUIREMENTS OF ASSHTO M31 OR ASTM A615. ALL REINFORCING STEEL SHALL BE ACCURATELY LOCATED IN THE FORMS AND PROPER CLEARANCES MAINTAINED WITH STAINLESS STEEL OR RUBBER TIPPED CHAIRS. REINFORCING DIMENSIONS ARE CENTER TO CENTER UNLESS OTHERWISE NOTED ON PLANS.

STRUCTURAL STEEL AND PILING: ALL STRUCTURAL STEEL SHALL COMPLY WITH AASHTO M270 GRADE 36. ALL PILING SHALL BE 12" STEEL "H" PILING, 53 LBS PER FOOT. PILE DESIGN LOADING 40 TONS (HS20-44).

WELDING: ALL WELDING SHALL CONFORM TO ANSI/AASHTO/ANS D 1.5 "BRIDGE WELDING CODE"

TOLERANCES: A DEVIATION OF MORE THAN 1/8" MAY BE CAUSE FOR REJECTION OF THE UNIT.

DESIGN DATA: AASHTO 1992 & INTERIM fs = 24,000 p.s.i.; fc = 1,200 p.s.i.; n = 10

BID ITEM:

_____ ELASTOMERIC BEARINGS TYPE I – PER EACH

_____ PRECAST CONCRETE ABUTMENT CAPS, 2'-0" WIDE BY 2'-1 5/16" DEEP BY 45'-6" LONG – PER EACH.

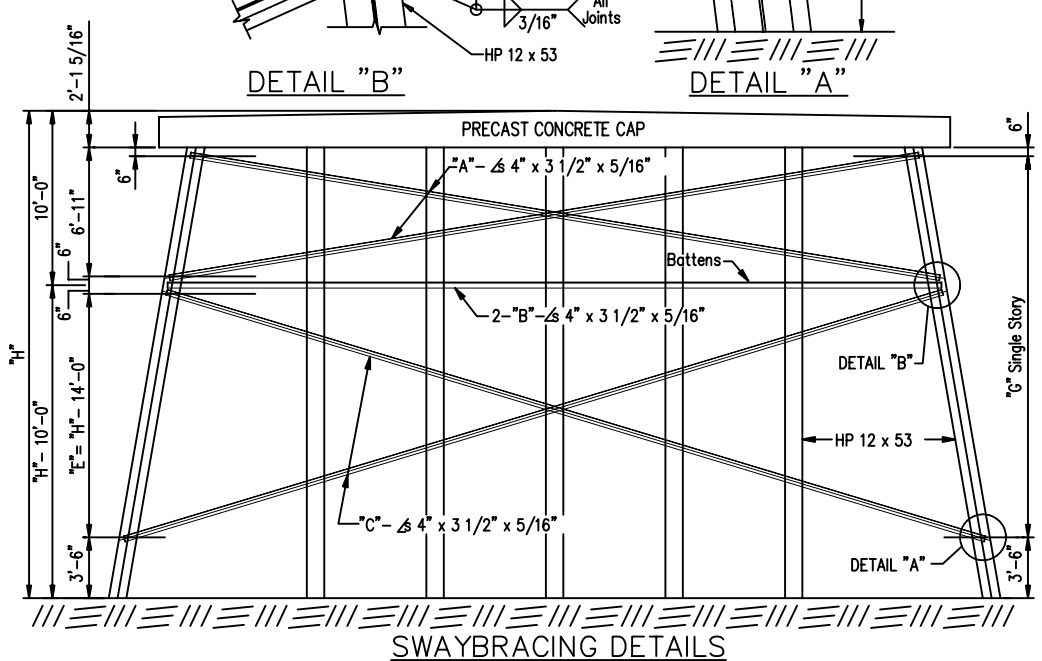

SWAYBRACING DETAILS
N.T.S.

Two Story Bent Shown, Single Story Bents Similar. Swaybracing For Single Story Bents Shall Be 4" x 3 1/2" x 5/16" Angles & Designated By The Letter "D". All Piling At Ground And, Or Water Line Shall Be Encased In Concrete, Note Encasement Details.

* Where "H" Is Less Than 13 Feet, Extend The Encasement To The Bottom Of The Cap And Omit Swaybracing.

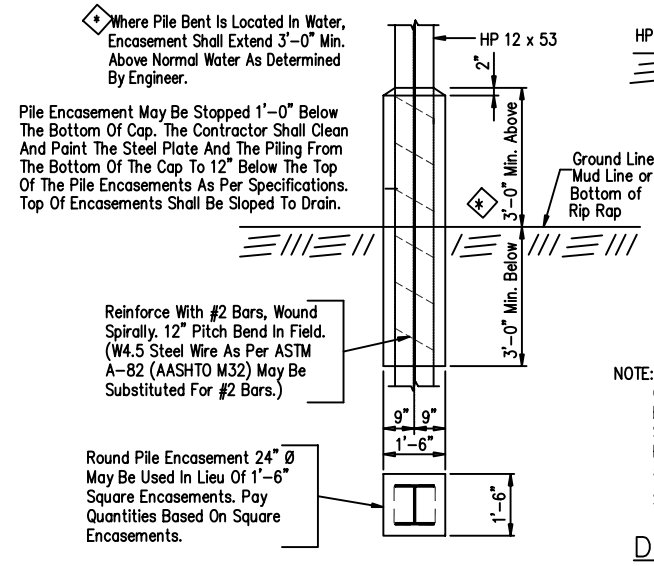

PILE ENCASEMENT DETAILS

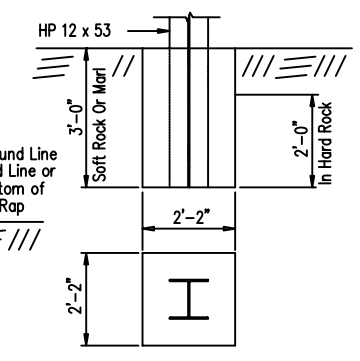

NOTE: Where Sufficient Pile Penetration Cannot Be Obtained, Piles Shall Be Encased With Concrete Pedestals As Shown. Cost Of Concrete Pedestals To Be Paid For In Accordance With Subarticle 505.05(f) Of The Standard Specifications. Approval For Use Must Be Obtained From The Bureau Of Construction.

DETAILS FOR PILING ON CONCRETE PEDESTAL FOUNDATION

TWO STORY BENT SWAYBRACING TABLE					
"H"	"E"	"A"	"B"	"C"	WT. LBS.
20'-0"	6'-0"	43'-8"	44'-6"	46'-0"	2066
21'-0"	7'-0"	43'-8"	44'-6"	46'-3"	2070
22'-0"	8'-0"	43'-8"	44'-6"	46'-7"	2075
23'-0"	9'-0"	43'-8"	44'-6"	46'-11"	2080
24'-0"	10'-0"	43'-8"	44'-6"	47'-4"	2087
25'-0"	11'-0"	43'-8"	44'-6"	47'-8"	2092

Batten Weight To Be Added To Above Tables. 14–Battens Req'd, 5/16" X 7 1/2" X 1'-6 1/4" @ 12.1# Each.

NOTE: Weight Given Is Total For Two Pieces Of Each Length Of Swaybracing Shown In Both Tables.

SINGLE STORY BENT SWAYBRACING TABLE			
"H"	"G"	"D"	WT. LBS.
13'-0"	6'-11"	43'-8"	672
14'-0"	7'-11"	44'-1"	679
15'-0"	8'-11"	44'-5"	684
16'-0"	9'-11"	44'-9"	689
17'-0"	10-11"	45'-2"	696
18'-0"	11'-11"	45'-7"	702
19'-0"	12'-11"	46'-1"	710

CONECUH BRIDGE & ENGINEERING, LLC
P. O. Box 129
Troy, Alabama 36081
249 County Rd. 2227
Troy, Alabama 36079
334-566-7422

PRECAST CONCRETE SPLIT BENT CAP
FOR USE WITH STEEL PILING & 32' OR 40' PRECAST
BRIDGE SLABS 35' CLEAR RADWAY – 30° SKEW

DATE: 7/25/03

STANDARD DWG. NO.
PCB-3540-30
SHEET NO. 1 OF 1