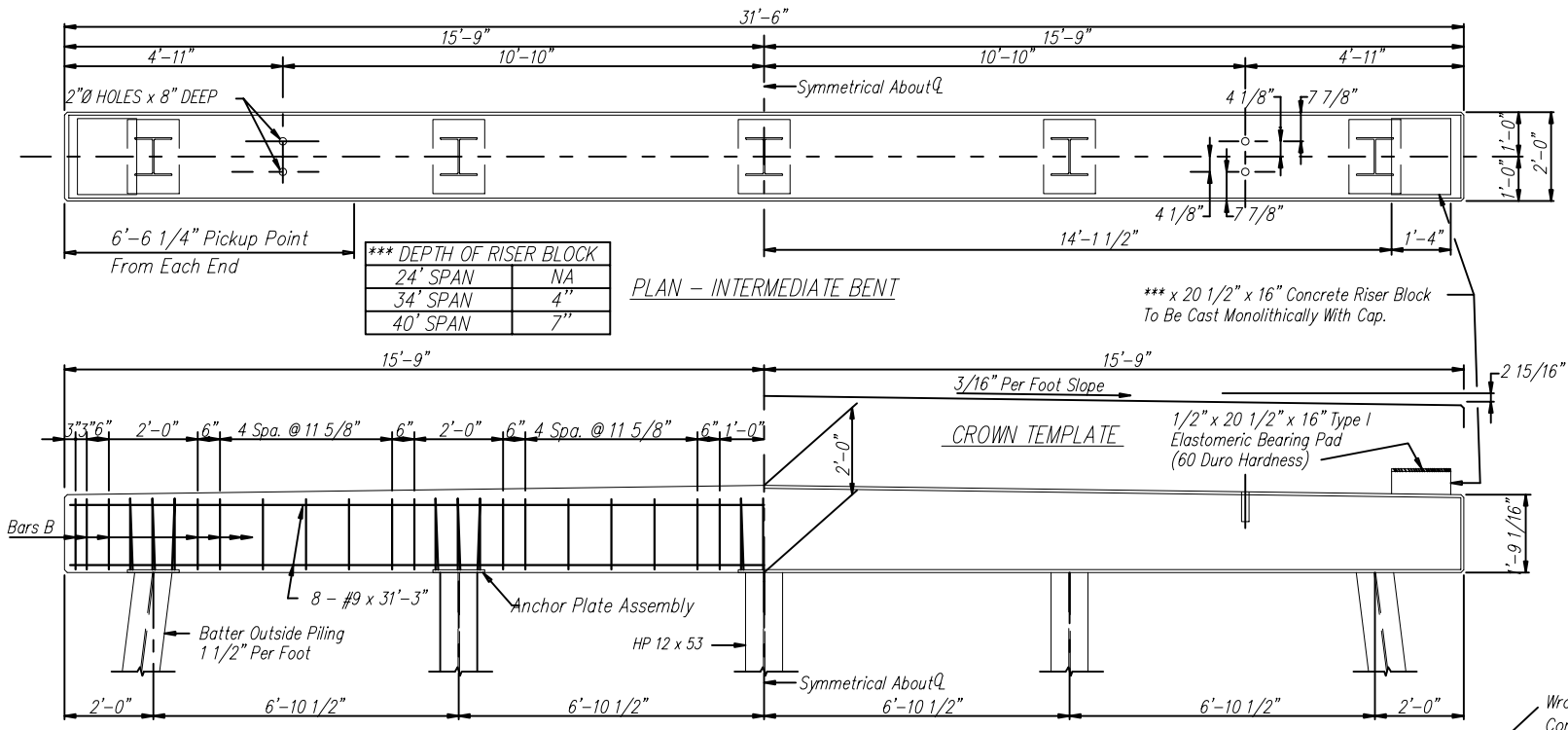

*** DEPTH OF RISER BLOCK	
24' SPAN	NA
34' SPAN	4"
40' SPAN	7"

PLAN – INTERMEDIATE BENT

ELEVATION – INTERMEDIATE BENT

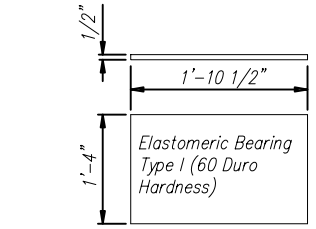

** INTERMEDIATE BENT BEARING PADS

** A 1/2" X 8" X 1'-4" Elastomeric Bearing, Type 1 Shall Be Used Under The Outside Legs Of The Exterior Channels.

**** PREFORMED EXP. JT. FILLER	
24' SPAN	1/4" x 16" x 28'
34' SPAN	1/4" x 20" x 28'
40' SPAN	1/4" x 23" x 28'

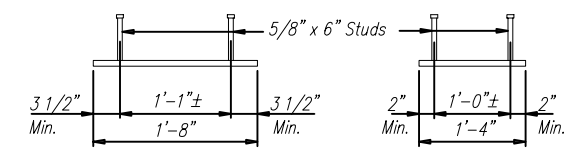

END

ELEVATION

ALTERNATE ANCHOR PLATE ASSEMBLY

NOTE: Where Alternate Anchor Assembly Is Used, 3 Bars B Spaced 6" Required At Each Pile.

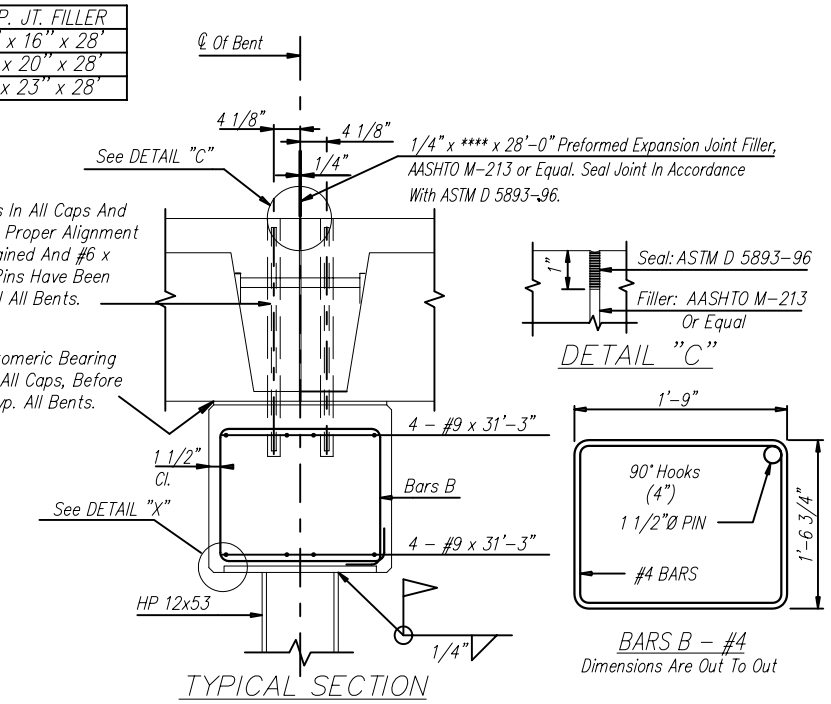

DETAIL "C"

TYPICAL SECTION

BARS B – #4

Dimensions Are Out To Out

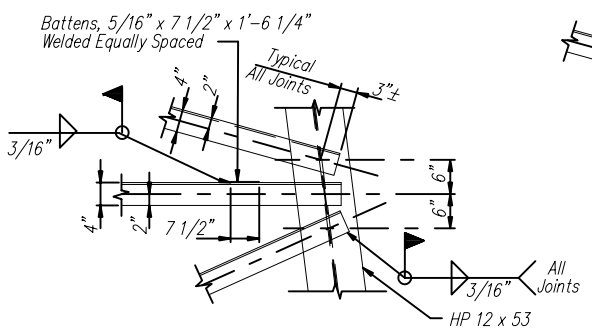

DETAIL "B"

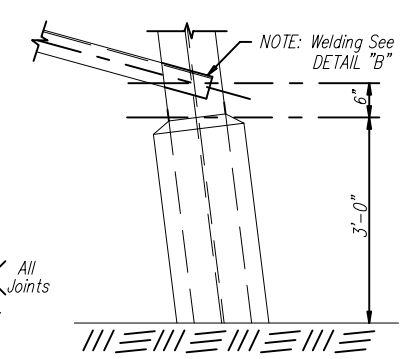

DETAIL "A"

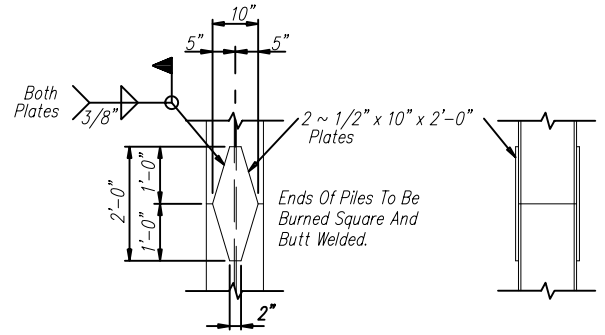

PILE SPLICE DETAIL

* Where Pile Bent Is Located In Water, Encasement Shall Extend 3'-0" Min. Above Normal Water As Determined By Engineer.

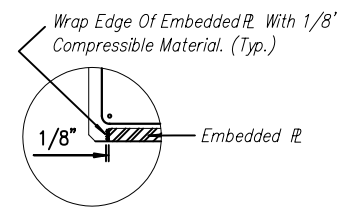

DETAIL "X"

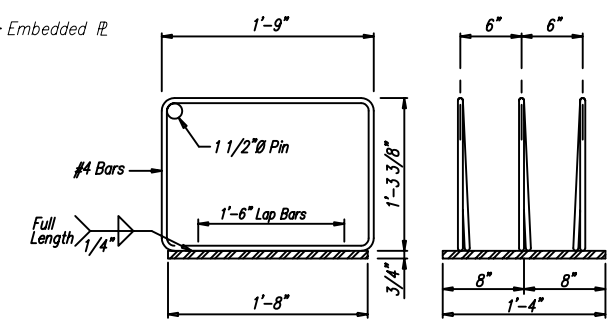

ANCHOR PLATE ASSEMBLY

GENERAL NOTES:

SPECIFICATIONS:
AASHTO STANDARD SPECIFICATIONS FOR HIGHWAY BRIDGES
AASHTO STANDARD SPECIFICATIONS FOR TRANSPORTATION MATERIALS
AMERICAN SOCIETY FOR TESTING AND MATERIALS
AMERICAN INSTITUTE OF STEEL CONSTRUCTION

DESIGN LOADING: A.A.S.H.T.O. HS 20-44

CONCRETE: CONCRETE SHALL CONFORM TO AASHTO CLASS A. MINIMUM 28 DAY COMPRESSIVE STRENGTH SHALL BE 3000 PSI. ALL EXPOSED CORNERS TO BE CHAMFERED 3/4" X 45° UNLESS OTHERWISE NOTED.

REINFORCING STEEL: AILL REINFORCING STEEL SHALL BE GRADE 60 BILLET STEEL MEETING THE REQUIREMENTS OF ASSHTO M31 OR ASTM A615. ALL REINFORCING STEEL SHALL BE ACCURATELY LOCATED IN THE FORMS AND PROPER CLEARANCES MAINTAINED WITH STAINLESS STEEL OR RUBBER TIPPED CHAIRS. REINFORCING DIMENSIONS ARE CENTER TO CENTER UNLESS OTHERWISE NOTED ON PLANS.

STRUCTURAL STEEL AND PILING: ALL STRUCTURAL STEEL SHALL COMPLY WITH AASHTO M270 GRADE 36. ALL PILING SHALL BE 12" STEEL "H" PILING, 53 LBS PER FOOT. PILE DESIGN LOADING 40 TONS (HS20-44).

WELDING: ALL WELDING SHALL CONFORM TO ANSI/AASHTO/ANS D 1.5 "BRIDGE WELDING CODE"

TOLERANCES: A DEVIATION OF MORE THAN 1/8" MAY BE CAUSE FOR REJECTION OF THE UNIT.

DESIGN DATA: AASHTO 1992 & INTERIM fs = 24,000 p.s.i.; fc = 1,200 p.s.i.; n = 10

BID ITEM:

_____ ELASTOMERIC BEARINGS TYPE I – PER EACH

_____ PRECAST CONCRETE INTERMEDIATE CAPS, 2'-0" WIDE BY 2'-0" DEEP BY 31'-6" LONG – PER EACH.

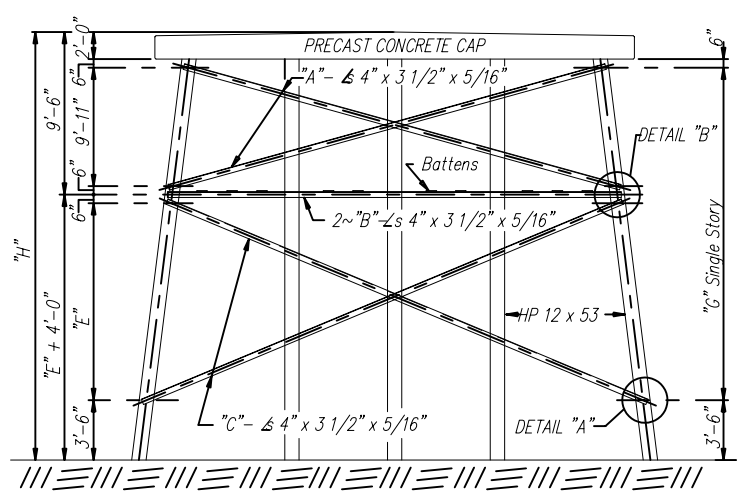

SWAYBRACING DETAILS

N.T.S.

Two Story Bent Shown, Single Story Bents Similar. Swaybracing For Single Story Bents Shall Be 4" x 3 1/2" x 5/16" Angles & Designated By The Letter "D". All Piling @ Ground And, Or Water Line Shall Be Encased In Concrete, Note Encasement Details.

* Where "H" Is Less Than 13 Feet, Extend The Encasement To The Bottom Of The Cap And Omit Swaybracing.

Pile Encasement May Be Stopped 1'-0" Below The Bottom Of Cap. The Contractor Shall Clean And Paint The Steel Plate And The Piling From The Bottom Of The Cap To 12" Below The Top Of The Pile Encasements As Per Specifications. Top Of Encasements Shall Be Sloped To Drain. For Alternate Paint Details, See Std. Dwg. I-131.

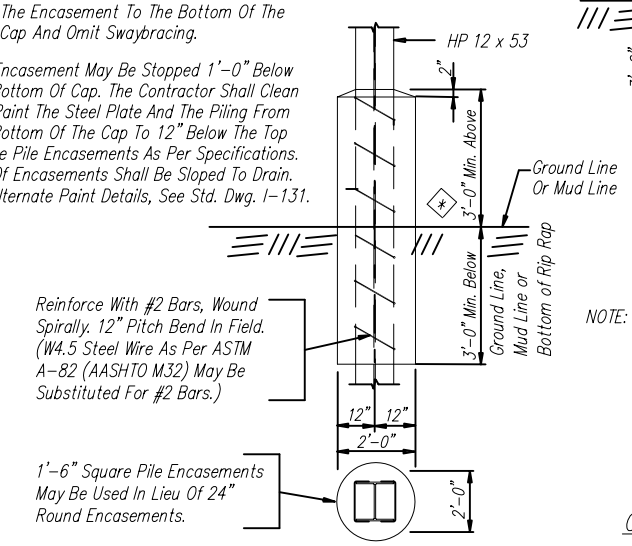

PILE ENCASEMENT DETAILS

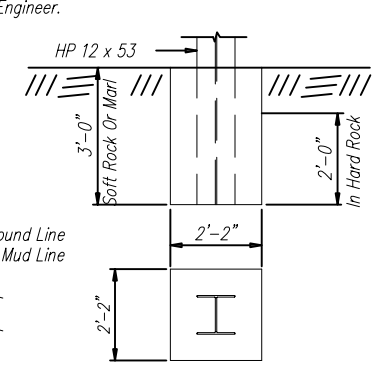

NOTE: Where Sufficient Pile Penetration Cannot Be Obtained, Piles Shall Be Encased With Concrete Pedestals As Shown. Cost Of The Concrete Pedestals To Be Paid For In Accordance With Subarticle 505.05(f) Of The Standard Specifications. Approval For Use Must Be Obtained From The Bureau Of Construction.

DETAILS FOR PILING ON CONCRETE PEDESTAL FOUNDATION

TWO STORY BENT SWAYBRACING TABLES					
"H"	"E"	"A"	"B"	"C"	WT. LBS.
20'-0"	6'-1"	29'-10"	30'-0"	31'-6"	1407
21'-0"	7'-1"	29'-10"	30'-0"	31'-10"	1412
22'-0"	8'-1"	29'-10"	30'-0"	32'-2"	1417
23'-0"	9'-1"	29'-10"	30'-0"	32'-7"	1423
24'-0"	10'-1"	29'-10"	30'-0"	33'-0"	1430
25'-0"	11'-1"	29'-10"	30'-0"	33'-5"	1436

Batten Weight To Be Added To Above Tables. 10-Battens Req'd, 5/16" X 7 1/2" X 1'-6 1/4" @ 12.1# Each.

NOTE: Weight Given Is Total For Two Pieces Of Each. Length Of Swaybracing Shown In Both Tables.

SINGLE STORY BENT SWAYBRACING TABLES			
"H"	"G"	"D"	WT. LBS.
13'-0"	7'-0"	29'-10"	459
14'-0"	8'-0"	30'-3"	466
15'-0"	9'-0"	30'-8"	472
16'-0"	10'-0"	31'-1"	478
17'-0"	11'-0"	31'-6"	485
18'-0"	12'-0"	32'-0"	493
19'-0"	13'-0"	32'-6"	501

CONECUH BRIDGE & ENGINEERING, LLC
P. O. Box 129
Troy, Alabama 36081
249 County Rd. 2227
Troy, Alabama 36079
334-566-7422

PRECAST CONCRETE BENT CAP FOR USE WITH STEEL PILING AND 24', 34' OR 40' PRECAST CONCRETE BRIDGE SLABS -- 28 FT. CLEAR ROADWAY

DATE: 7/24/03

STANDARD DWG. NO. PCB-2840

SHEET NO. 1 OF 1

12840S (3/4"=1") 2-5-99