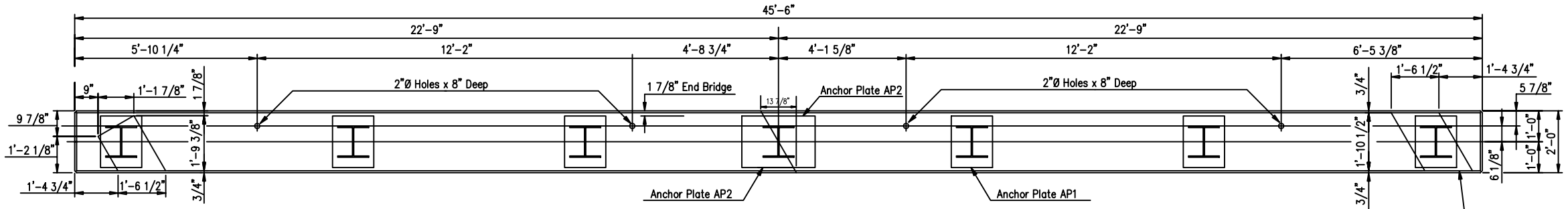

PLAN – SPLIT END BENT

NOTE:
Field Cut Neoprene
Rail Pad To Match
End Of Riser Block.

NOTE:
LEFT AHEAD BRIDGE AS SHOWN
RIGHT AHEAD BRIDGE OPP. HAND

** DEPTH OF RISER BLOCK	
32' SPAN	4"
40' SPAN	7"

** x 22 1/2" x 16"
Concrete Riser Block To Be Cast
Monolithically With Cap

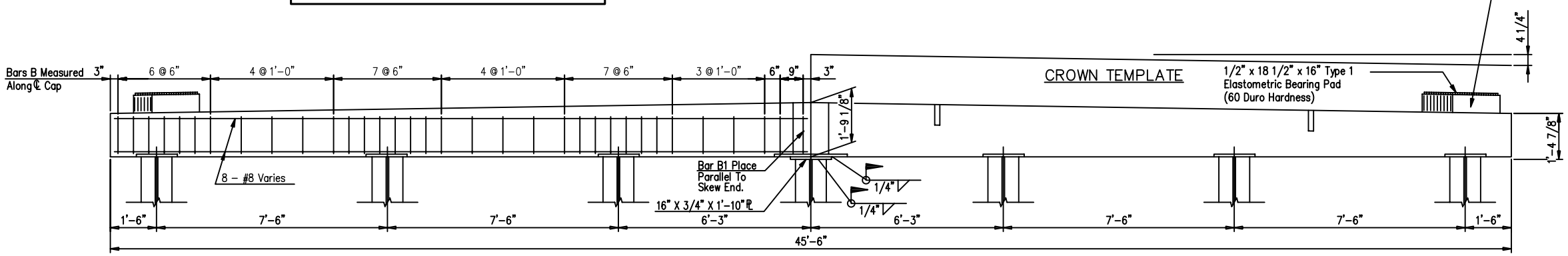

ELEVATION – SPLIT END BENT

NOTE: CAP MAY BE CAST AS ONE PIECE

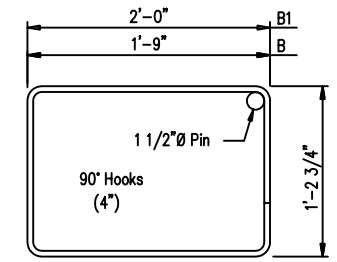

BARS B – #4

BAR BENDING DETAILS

Dimensions Are Out To Out

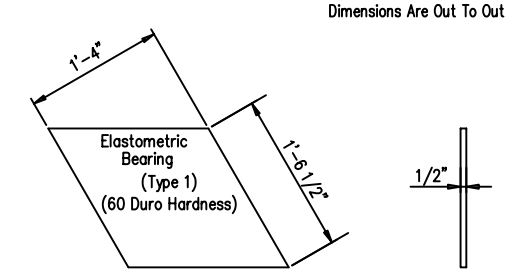

* BEARING PADS

* A ½" x 8" x 1'-6 1/2" elastomeric bearing, Type 1, shall be used under the outside leg of the exterior channels.

NOTE: ANY GRINDING OR LEVELING ON THE TOP SURFACE OF THE CAP OR RISER THAT MAY BE REQUIRED TO INSURE PROPER SEATING OF THE BARRIER RAIL AND PRECAST CHANNEL SHALL BE PERFORMED BY THE CONTRACTOR AT NO ADDITIONAL COST TO THE PROJECT.

*** PREFORMED EXP. JT. FILLER	
32' SPAN	1/4" x 20" x 40'-5"
40' SPAN	1/4" x 23" x 40'-5"

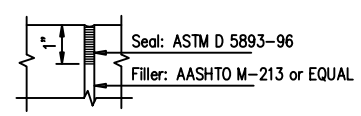

DETAIL "C"

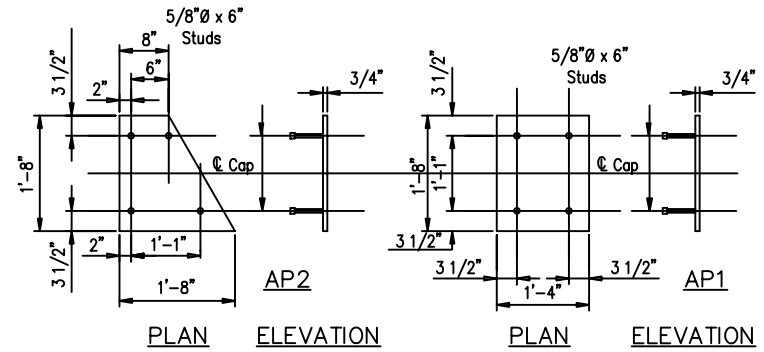

ANCHOR PLATE ASSEMBLIES

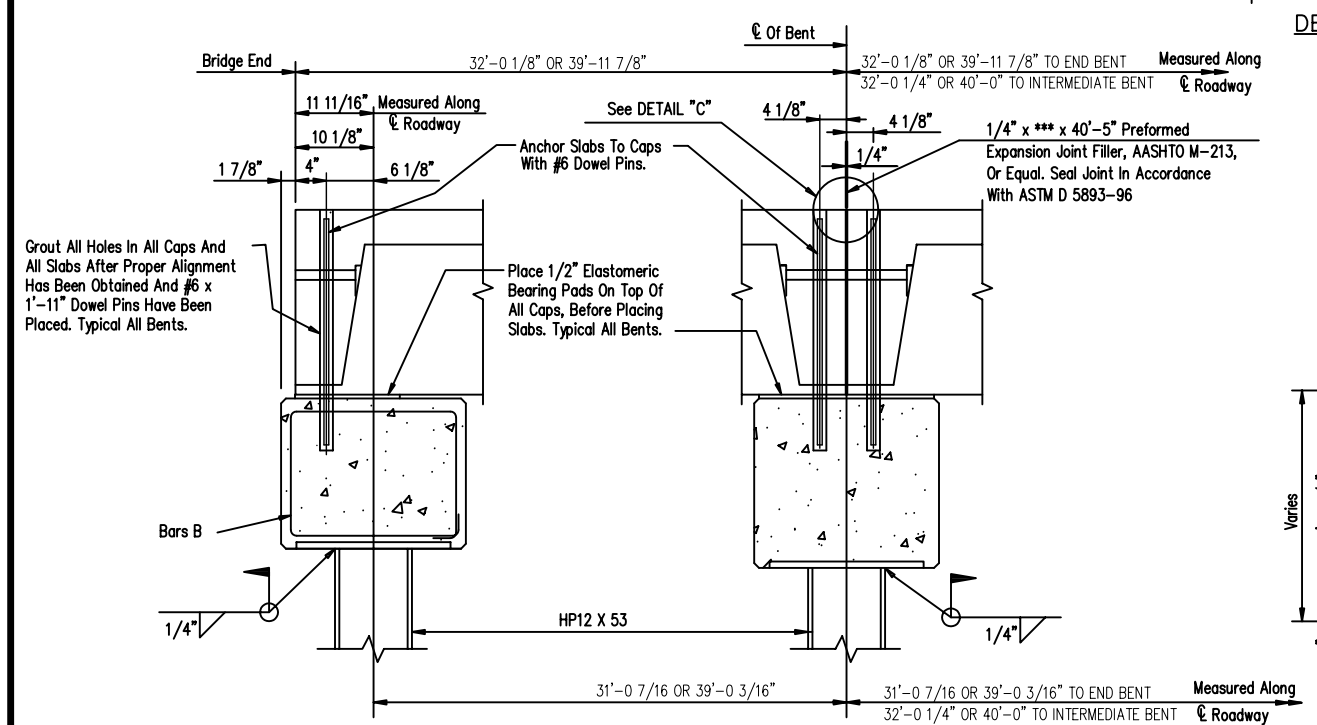

TYPICAL END SECTION

TYPICAL INTERMEDIATE SECTION

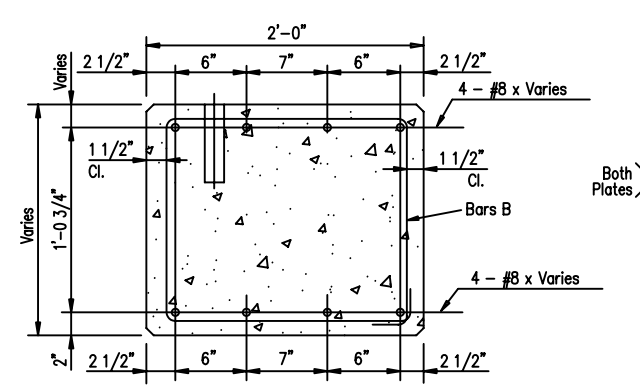

STEEL PLACEMENT DETAIL

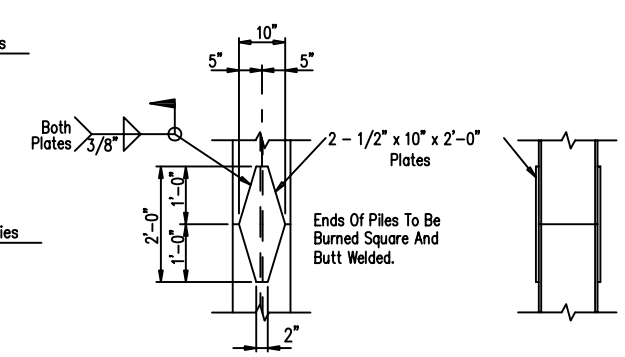

PILE SPLICE DETAIL

GENERAL NOTES:

SPECIFICATIONS:
AASHTO STANDARD SPECIFICATIONS FOR HIGHWAY BRIDGES
AASHTO STANDARD SPECIFICATIONS FOR TRANSPORTATION MATERIALS
AMERICAN SOCIETY FOR TESTING AND MATERIALS
AMERICAN INSTITUTE OF STEEL CONSTRUCTION

DESIGN LOADING: A.A.S.H.T.O. HS 20-44

CONCRETE: CONCRETE SHALL CONFORM TO AASHTO CLASS A. MINIMUM 28 DAY COMPRESSIVE STRENGTH SHALL BE 3000 PSI. ALL EXPOSED CORNERS TO BE CHAMFERED 3/4" X 45° UNLESS OTHERWISE NOTED.

REINFORCING STEEL: AILL REINFORCING STEEL SHALL BE GRADE 60 BILLET STEEL MEETING THE REQUIREMENTS OF ASSHTO M31 OR ASTM A615. ALL REINFORCING STEEL SHALL BE ACCURATELY LOCATED IN THE FORMS AND PROPER CLEARANCES MAINTAINED WITH STAINLESS STEEL OR RUBBER TIPPED CHAIRS. REINFORCING DIMENSIONS ARE CENTER TO CENTER UNLESS OTHERWISE NOTED ON PLANS.

STRUCTURAL STEEL AND PILING: ALL STRUCTURAL STEEL SHALL COMPLY WITH AASHTO M270 GRADE 36. ALL PILING SHALL BE 12" STEEL "H" PILING, 53 LBS PER FOOT. PILE DESIGN LOADING 28 TONS (HS20-44).

WELDING: ALL WELDING SHALL CONFORM TO ANSI/AASHTO/ANS D 1.5 "BRIDGE WELDING CODE"

TOLERANCES: A DEVIATION OF MORE THAN 1/8" MAY BE CAUSE FOR REJECTION OF THE UNIT.

DESIGN DATA: AASHTO 1992 & INTERIM fs = 24,000 p.s.i.; fc = 1,200 p.s.i.; n = 10

BID ITEM:

_____ ELASTOMERIC BEARINGS TYPE I – PER EACH

_____ PRECAST CONCRETE ABUTMENT CAPS, 2'-0" WIDE BY 1'-9 1/8" DEEP BY 45'-6" LONG – PER EACH.

CONECUH BRIDGE & ENGINEERING, LLC
P. O. Box 129
Troy, Alabama 36081
249 County Rd. 2227
Troy, Alabama 36079
334-566-7422

PRECAST CONCRETE SPLIT END BENT CAP
FOR USE WITH STEEL PILING & 32' OR 40' PRECAST
BRIDGE SLABS 35' CLEAR ROADWAY – 30° SKEW

DATE: 7/25/03

STANDARD DWG. NO. PCA-3540-30

SHEET NO. 1 OF 1