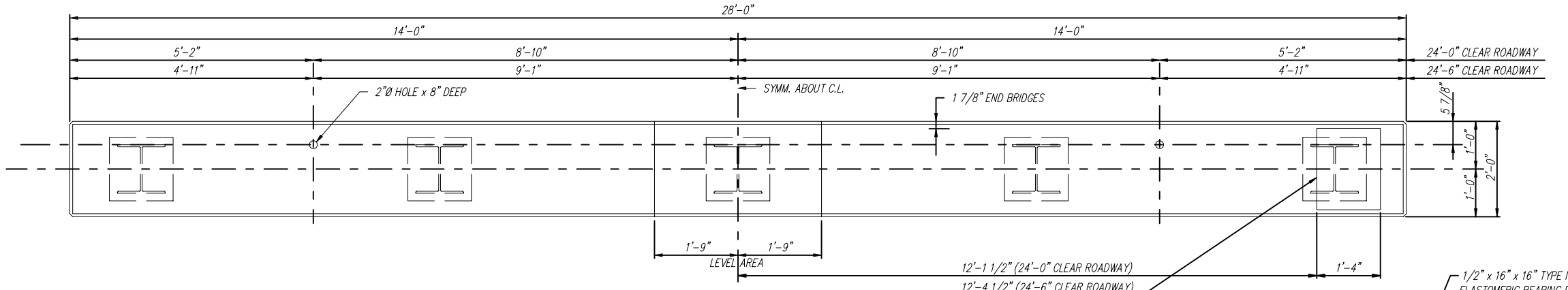

PLAN – END BENT

SCALE: 3/4" = 1'-0"

** DEPTH OF RISER BLOCK	
24' SPAN	NA
34' SPAN	4"
40' SPAN	7"

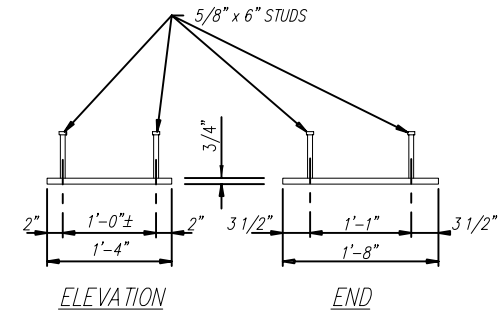

ALTERNATE ANCHOR SYSTEM

SCALE: 1" = 1'-0"

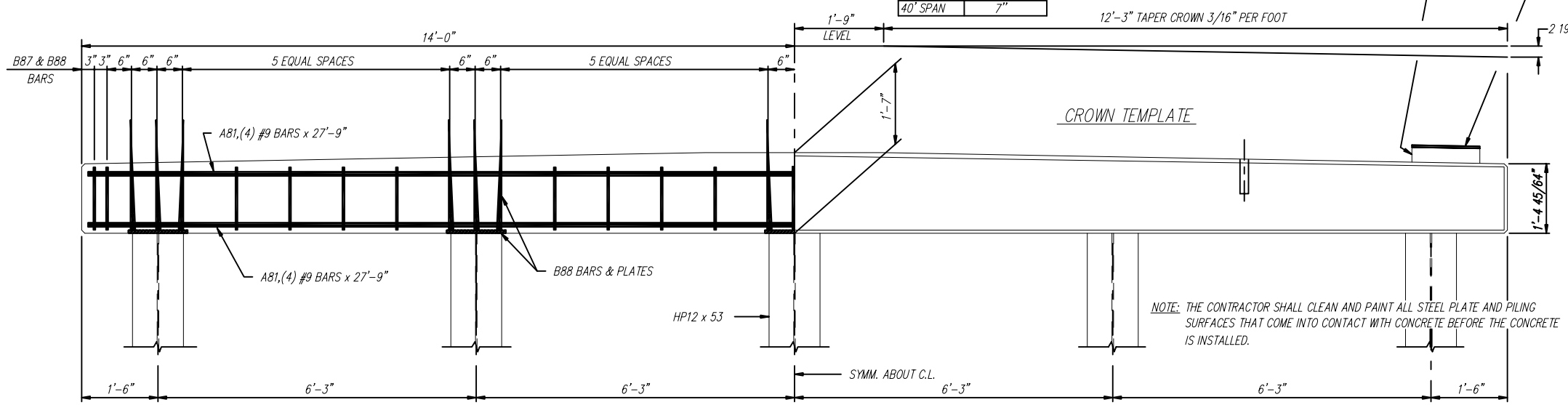

NOTE: THE CONTRACTOR SHALL CLEAN AND PAINT ALL STEEL PLATE AND PILING SURFACES THAT COME INTO CONTACT WITH CONCRETE BEFORE THE CONCRETE IS INSTALLED.

ELEVATION – END BENT

SCALE: 3/4" = 1'-0"

NOTE: ANY GRINDING OR LEVELING ON THE TOP SURFACE OF THE RISER OR CAP THAT MAY BE REQUIRED TO INSURE PROPER SEATING OF THE BARRIER RAIL AND PRECAST CHANNEL SHALL BE PERFORMED BY THE CONTRACTOR AT NO ADDITIONAL COST TO THE PROJECT.

*** PREFORMED EXP. JT. FILLER	
24' SPAN	1/4" x 16" x 24' or 24'-6"
34' SPAN	1/4" x 20" x 24' or 24'-6"
40' SPAN	1/4" x 23" x 24' or 24'-6"

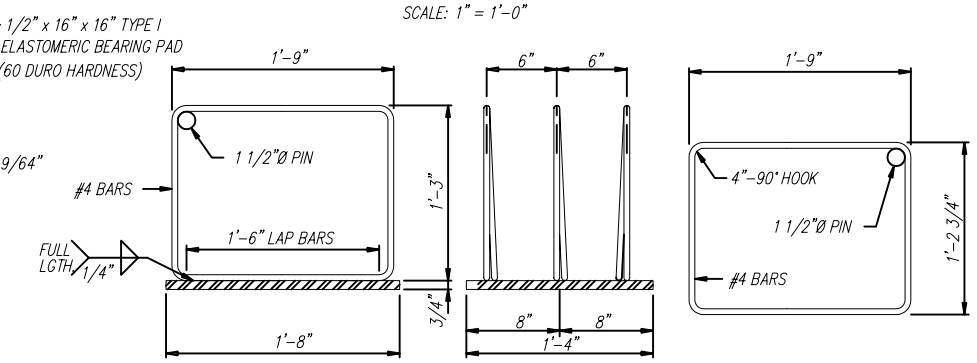

B-88 BARS & ANCHOR PLATES

SCALE: 1 1/2" = 1'-0"

B-87 BARS – 20 REQ'D

SCALE: 1 1/2" = 1'-0"

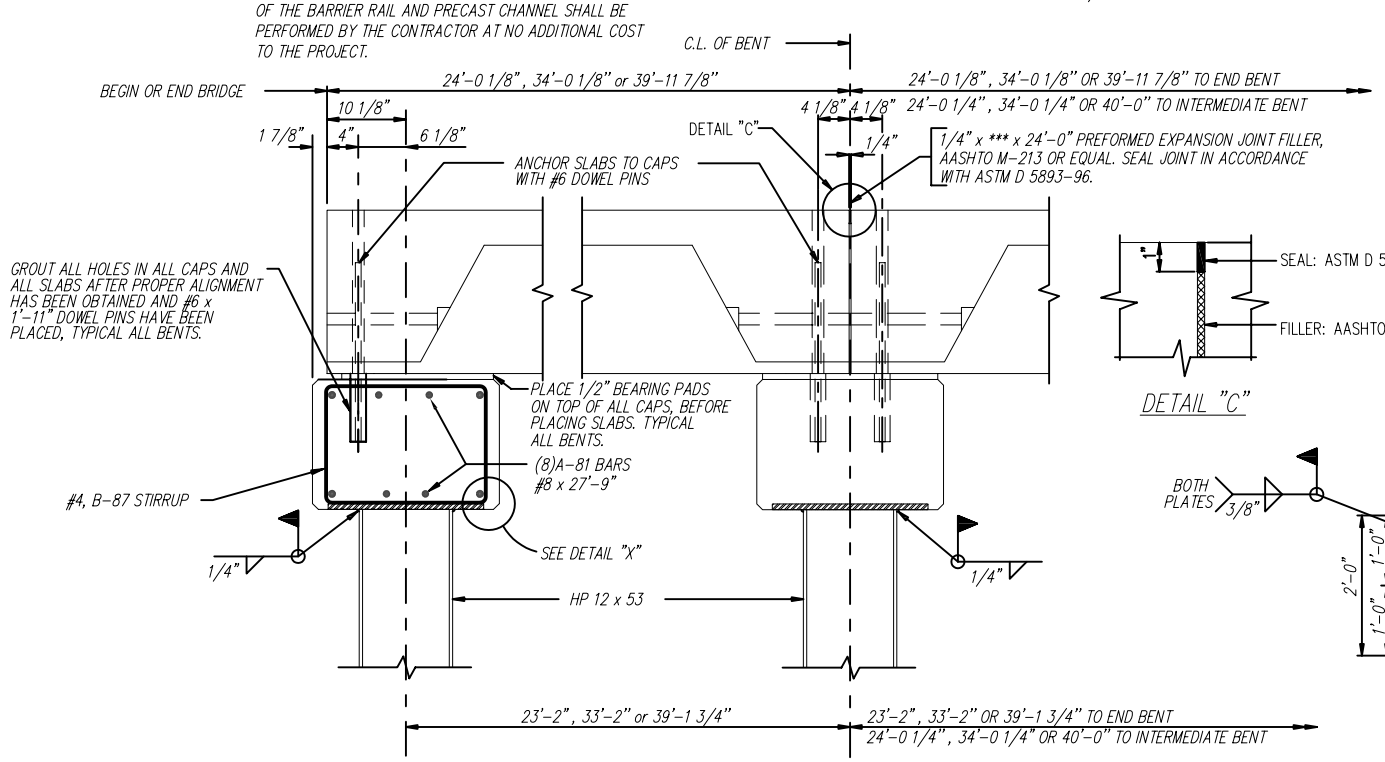

SECTION – END BENT

SECTION – INTERMEDIATE BENT

SCALE: 1" = 1'-0"

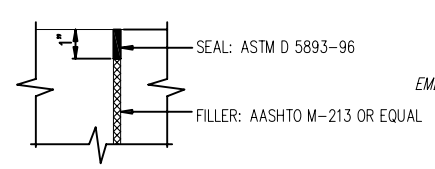

DETAIL "C"

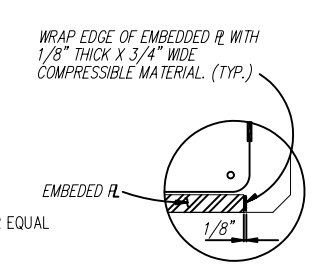

DETAIL "X"

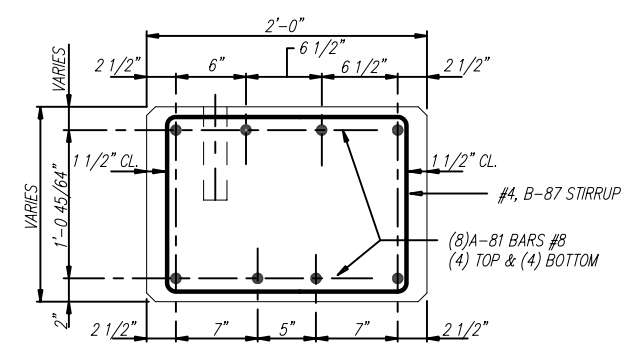

STEEL PLACEMENT DETAIL

SCALE: 1 1/2" = 1'-0"

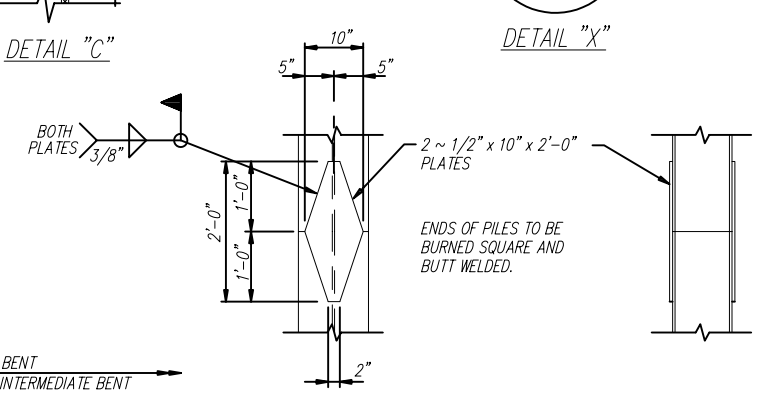

PILE SPLICE DETAIL

SCALE: 3/4" = 1'-0"

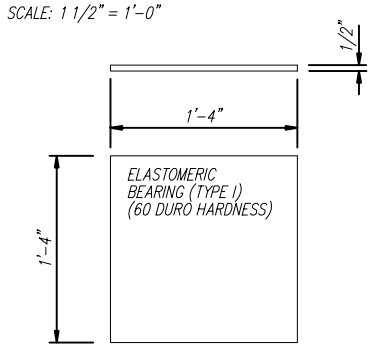

* END BENT BEARING PADS

SCALE: 1 1/2" = 1'-0"

* A 1/2" X 8" X 1'-4" ELASTOMERIC BEARING, TYPE 1 SHALL BE USED UNDER THE OUTSIDE LEGS OF THE EXTERIOR CHANNELS.

GENERAL NOTES:

SPECIFICATIONS:
AASHTO STANDARD SPECIFICATIONS FOR HIGHWAY BRIDGES
AASHTO STANDARD SPECIFICATIONS FOR TRANSPORTATION MATERIALS
AMERICAN SOCIETY FOR TESTING AND MATERIALS
AMERICAN INSTITUTE OF STEEL CONSTRUCTION

DESIGN LOADING: A.A.S.H.T.O. HS 20-44

CONCRETE: CONCRETE SHALL CONFORM TO AASHTO CLASS A. MINIMUM 28 DAY COMPRESSIVE STRENGTH SHALL BE 3000 PSI. ALL EXPOSED CORNERS TO BE CHAMFERED 3/4" X 45° UNLESS OTHERWISE NOTED.

REINFORCING STEEL: AILL REINFORCING STEEL SHALL BE GRADE 60 BILLET STEEL MEETING THE REQUIREMENTS OF ASSHTO M31 OR ASTM A615. ALL REINFORCING STEEL SHALL BE ACCURATELY LOCATED IN THE FORMS AND PROPER CLEARANCES MAINTAINED WITH STAINLESS STEEL OR RUBBER TIPPED CHAIRS. REINFORCING DIMENSIONS ARE CENTER TO CENTER UNLESS OTHERWISE NOTED ON PLANS.

STRUCTURAL STEEL AND PILING: ALL STRUCTURAL STEEL SHALL COMPLY WITH AASHTO M270 GRADE 36. ALL PILING SHALL BE 12" STEEL "H" PILING, 53 LBS PER FOOT. PILE DESIGN LOADING 24 TONS (HS20-44).

WELDING: ALL WELDING SHALL CONFORM TO ANSI/AASHTO/ANS D 1.5 "BRIDGE WELDING CODE"

TOLERANCES: A DEVIATION OF MORE THAN 1/8" MAY BE CAUSE FOR REJECTION OF THE UNIT.

DESIGN DATA: AASHTO 1992 & INTERIM fs = 24,000 p.s.i.; fc = 1,200 p.s.i.; n = 10

BID ITEM:

_____ ELASTOMERIC BEARINGS TYPE I – PER EACH

_____ PRECAST CONCRETE ABUTMENT CAPS, 2'-0" WIDE BY 1'-7" DEEP BY 28'-0" LONG – PER EACH.

CONECUH BRIDGE & ENGINEERING, LLC
P. O. Box 129
Troy, Alabama 36081
249 County Rd. 2227
Troy, Alabama 36079
334-566-7422

PRECAST CONCRETE END BENT CAP
FOR USE WITH STEEL PILING & 24', 34', OR 40'
PRECAST BRIDGE SLABS 24'-0" & 24'-6" CLEAR ROADWAY

DATE: 7/24/03

STANDARD DWG. NO.
PCA-2440
SHEET NO. 1 OF 1