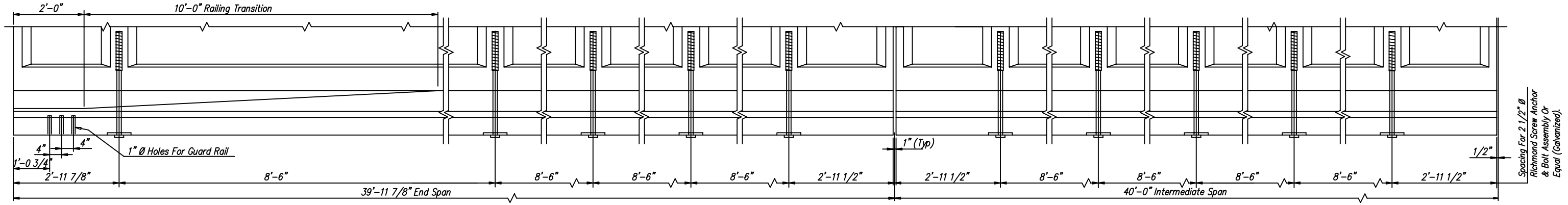

END SPAN — PLAN — INTERMEDIATE SPAN

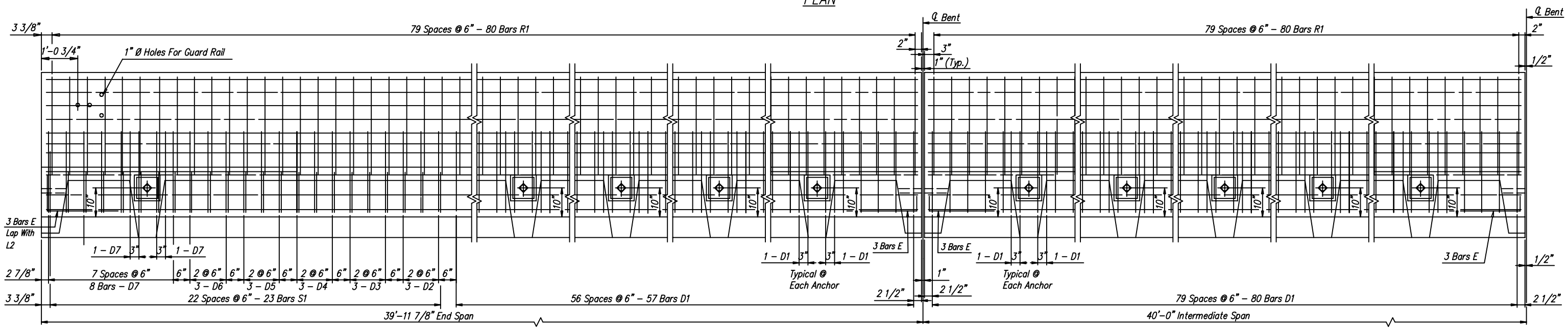

END SPAN — ELEVATION — INTERMEDIATE SPAN

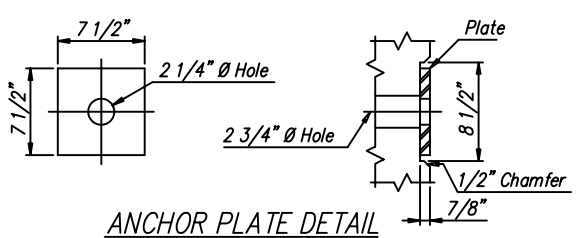

ANCHOR PLATE DETAIL
7 1/2 " x 7 1/2" x 7/8" Galvanized Plate

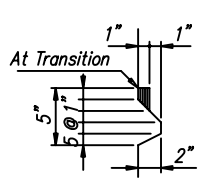

KEYWAY DETAIL

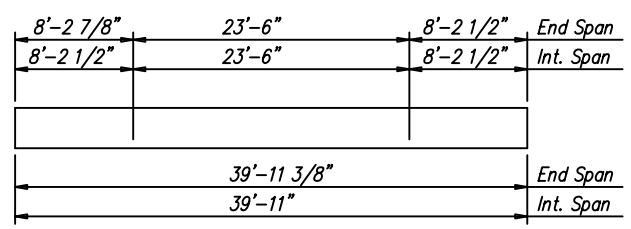

PICKUP POINTS

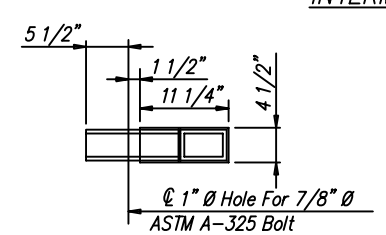

TOP

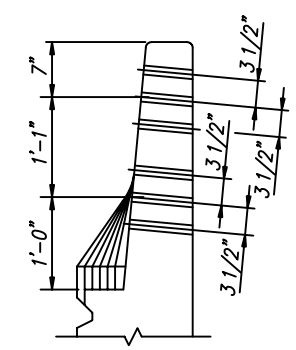

GUARD RAIL ATTACHMENT FOR TYPE 13 ANCHOR
See End Elevation This Sheet For Details And Dimensions Not Shown.

GENERAL NOTES

SPECIFICATIONS:
AASHTO STANDARD SPECIFICATIONS FOR HIGHWAY BRIDGES
AASHTO STANDARD SPECIFICATIONS FOR TRANSPORTATION MATERIALS
AMERICAN SOCIETY FOR TESTING AND MATERIALS

DESIGN LOADING: AASHTO HS 20-44

REINFORCING STEEL: ALL REINFORCING STEEL SHALL BE BILLET STEEL MEETING THE REQUIREMENTS OF AASHTO M31 OR ASTM A165 BARS TYPE L SHALL BE GRADE 60. ALL OTHER REINFORCING BARS SHALL HAVE MINIMUM STRENGTH OF GRADE 40.

CONCRETE: CONCRETE SHALL CONFORM TO AASHTO CLASS AE WITH A MINIMAL 28 DAY BREAKING STRENGTH OF 5000 PSI.

SURFACE FINISH: FINISH FOR RAILING SHALL BE IN ACCORDANCE WITH SECTION 8.10.1, DIVISION II – CONSTRUCTION, AASHTO STANDARD SPECIFICATIONS FOR HIGHWAY BRIDGES, 1996 EDITION. ADDITIONALLY THE TRAFFIC SIDE, TOP, AND BACK OF THE RAIL MUST BE COATED WITH A PRODUCT SUCH AS THOROCOAT AS PRODUCED BY CHEMREX, INC. OR EQUAL.

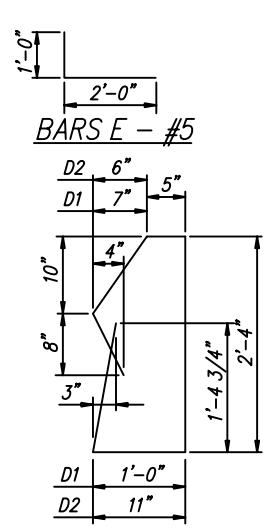

BARS E – #5

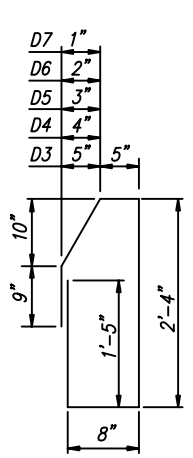

BARS D1 & D2 – #4 — BARS D3–D7 – #4

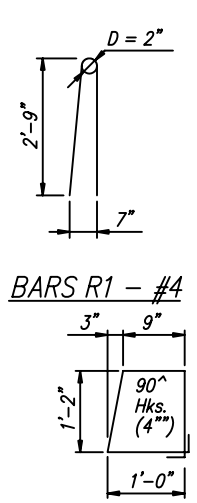

BARS R1 – #4 — BARS S1 – #4

BAR BENDING DETAILS
Dimensions Are Out To Out.

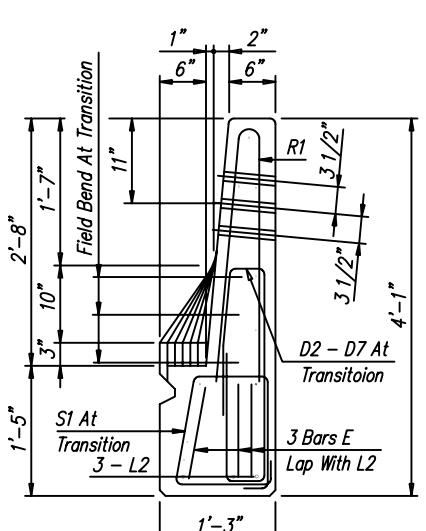

END ELEVATION
(Showing Single Rail Attachment)

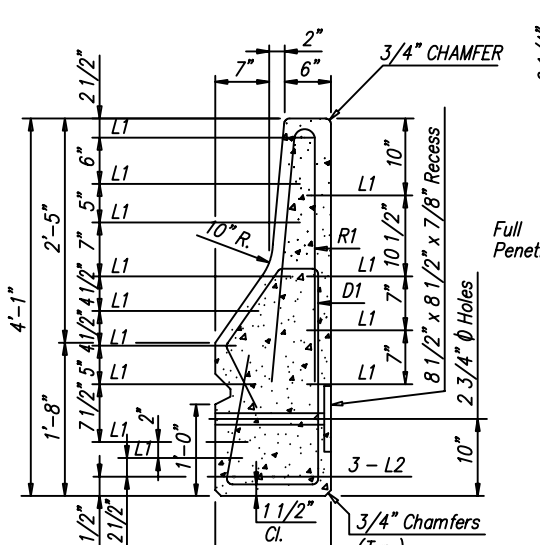

L1 Bars – #4
L2 Bars – #9

TYPICAL SECTION
Showing Bar Reinforcing

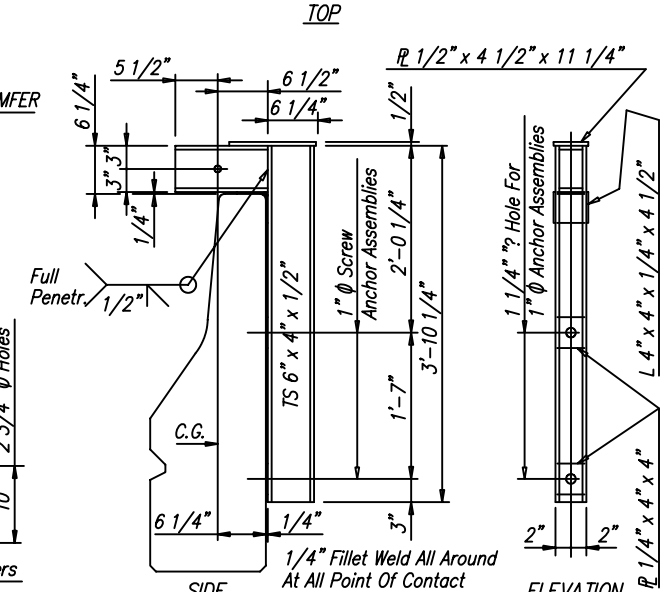

SIDE — ELEVATION

HANDLING DEVICE

CONECUH BRIDGE & ENGINEERING, LLC
P. O. Box 129
Troy, Alabama 36081
249 County Rd. 2227
Troy, Alabama 36079
334-566-7422

PRECAST CONCRETE BARRIER RAIL
FOR USE WITH
PRECAST SLAB STANDARD
PC–40

DATE: 7/18/03

STANDARD DWG. NO. PCBR–1(40)

SHEET NO. 1 OF 1

R40 (3/4"=1') 2-16-98