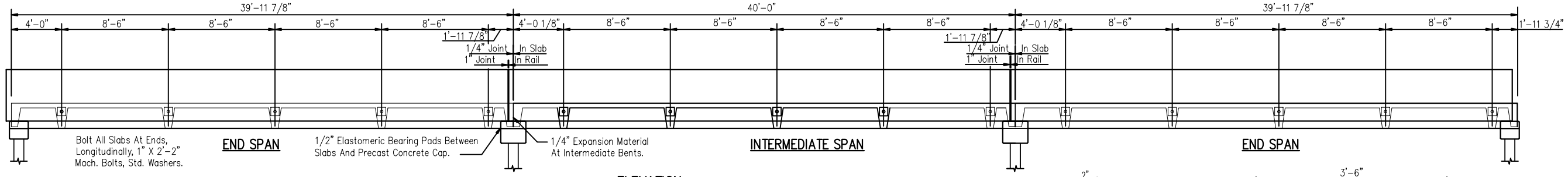

ELEVATION

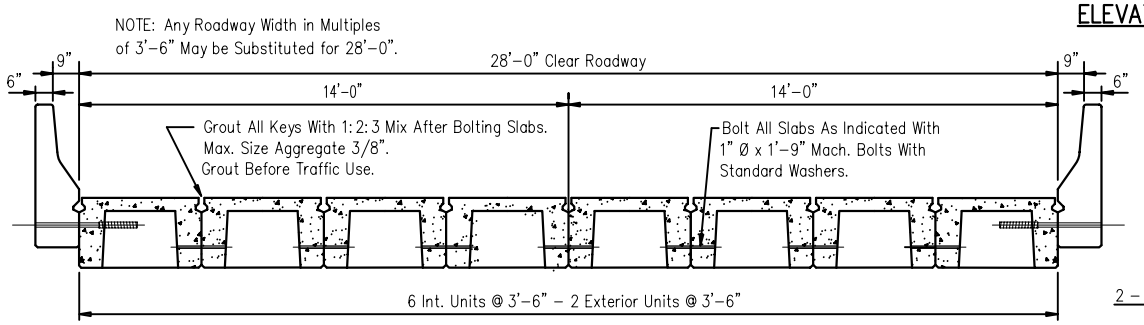

SECTION OF ROADWAY

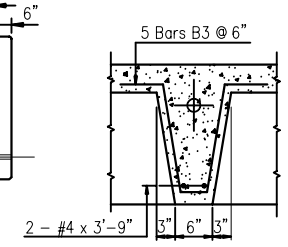

SECTION A-A

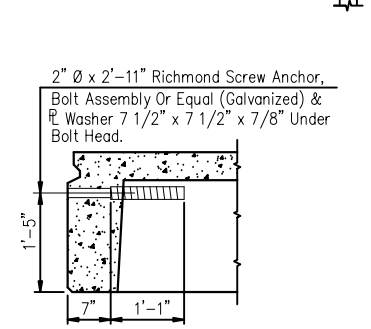

BARRIER ANCHOR DETAIL

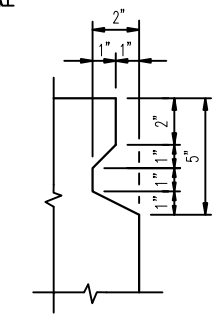

KEY DETAIL

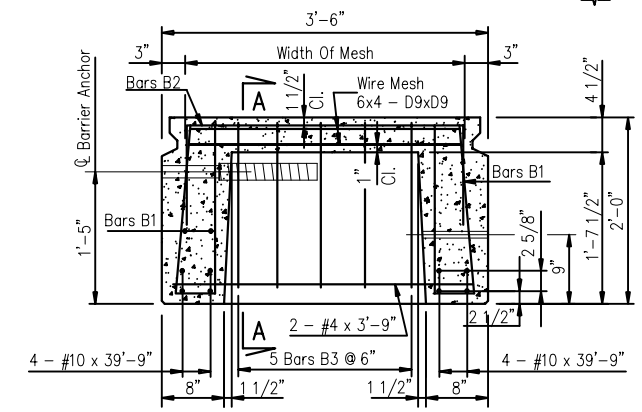

EXTERIOR UNIT SECTION

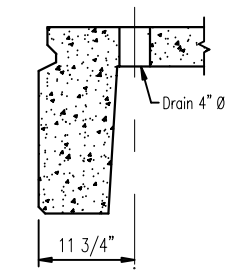

SECTION AT DRAIN

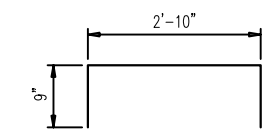

BARS B2 - #3

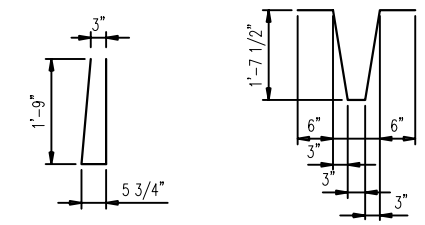

BARS B1 - #3 BARS B3 - #3

BAR BENDING DETAILS

Dimensions Are Out To Out

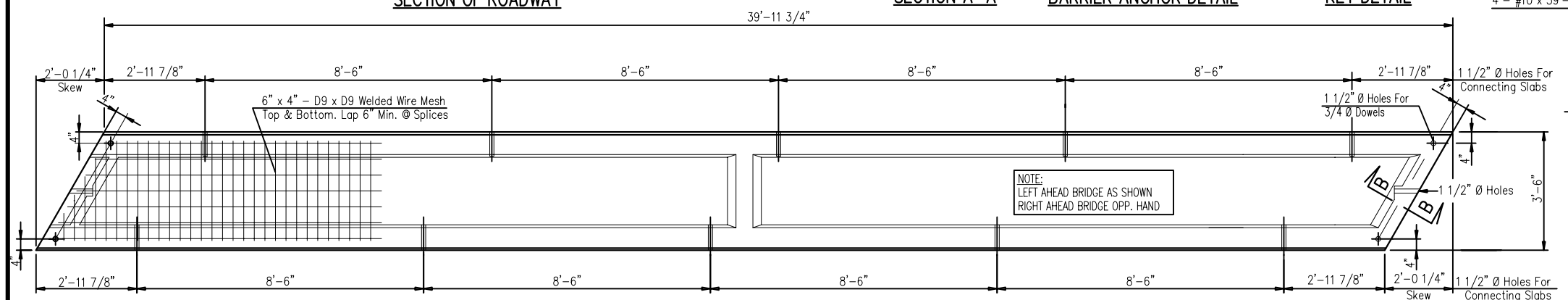

PLAN - INTERIOR UNIT

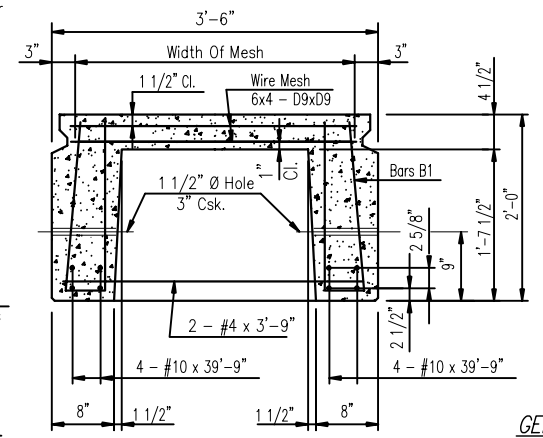

INTERIOR UNIT SECTION

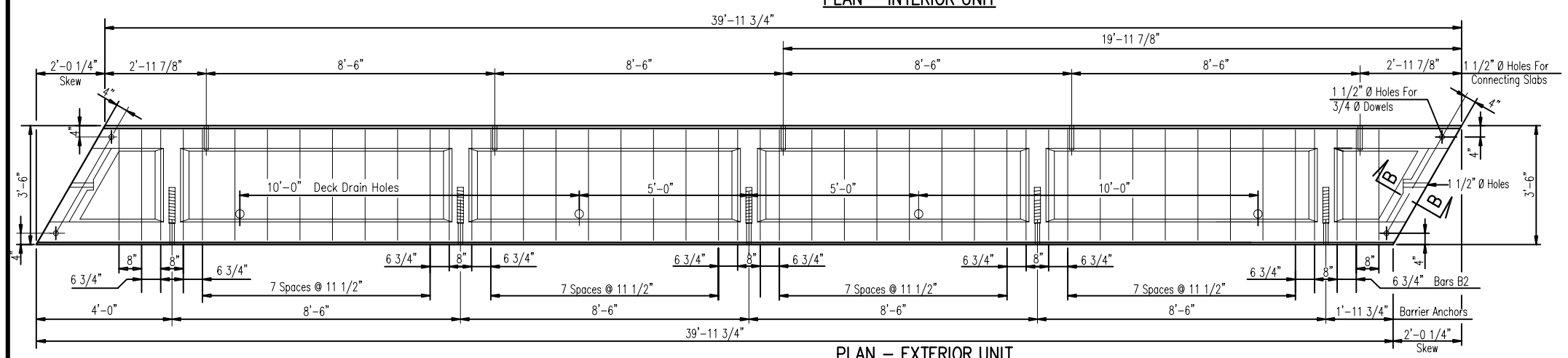

PLAN - EXTERIOR UNIT

Showing Additional Top Reinforcing Steel

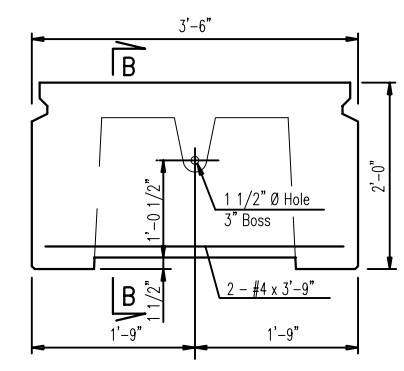

END ELEVATION

Skew Not Shown

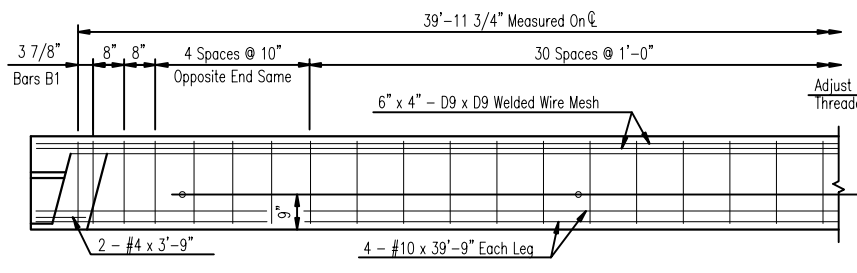

PART LONGITUDINAL SECTION ON ℄ - INTERIOR UNIT

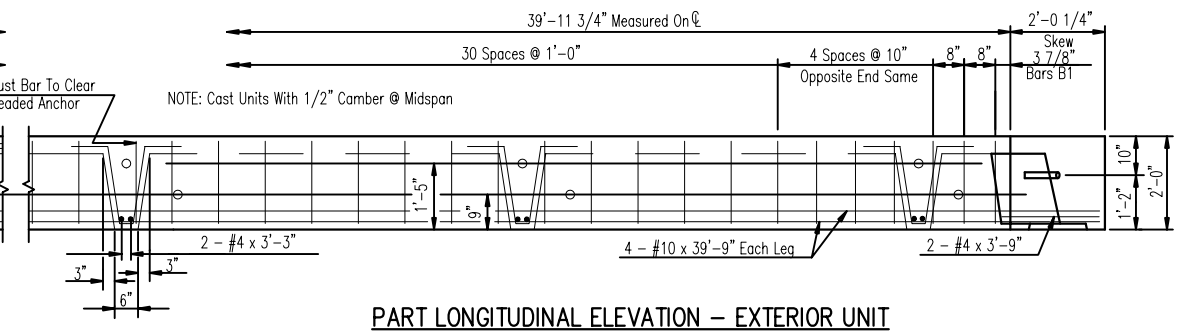

PART LONGITUDINAL ELEVATION - EXTERIOR UNIT

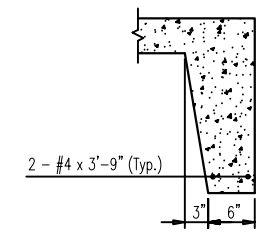

SECTION B-B

GENERAL NOTES:

AASHTO STANDARD SPECIFICATIONS FOR HIGHWAY BRIDGES
AASHTO STANDARD SPECIFICATIONS FOR TRANSPORTATION MATERIALS
AMERICAN SOCIETY FOR TESTING AND MATERIALS
AMERICAN INSTITUTE OF STEEL CONSTRUCTION

REINFORCING STEEL: ALL REINFORCING STEEL SHALL BE GRADE 60 BILLET STEEL MEETING THE REQUIREMENTS OF AASHTO M31 OR ASTM A615. ALL REINFORCING STEEL SHALL BE ACCURATELY LOCATED IN THE FORMS AND PROPER CLEARANCES MAINTAINED WITH STAINLESS STEEL OR RUBBER TIPPED CHAIRS. REINFORCING DIMENSIONS ARE CENTER TO CENTER UNLESS OTHERWISE NOTED ON PLANS.

WELDED WIRE FABRIC SHALL CONFORM TO THE REQUIREMENTS OF AASHTO M221 or M225.

EXPANSION JOINTS: JOINT FILLER TO BE AASHTO M-213 OR EQUAL

CONCRETE: CONCRETE SHALL CONFORM TO AASHTO CLASS AE. MINIMUM 28 DAY COMPRESSIVE STRENGTH SHALL BE 4500 PSI.

HARDWARE: ALL BOLTS SHALL CONFORM TO ASTM A-307 AND BE GALVANIZED IN ACCORDANCE WITH ASTM-A153

DESIGN DATA:
Specifications:.....A.A.S.H.T.O., 1992 And Interims.
Design Loading:.....HS 20-44
fs= 24,000 p.s.i; fm= 30,000 p.s.i.; fc= 1,800 p.s.i.; n = 8

CONECUH BRIDGE & ENGINEERING, LLC
P. O. Box 129
Troy, Alabama 36081
249 County Rd. 2227
Troy, Alabama 36079
334-566-7422

PRECAST CONCRETE BRIDGE SLABS - 40' SPANS
30° SKEW
HS 20-44 LOADING

DATE: 7/18/03

STANDARD DWG. NO. PC-40-30

SHEET NO. 1 OF 1

s4028cskew (1/2"=1') 05-10/2001