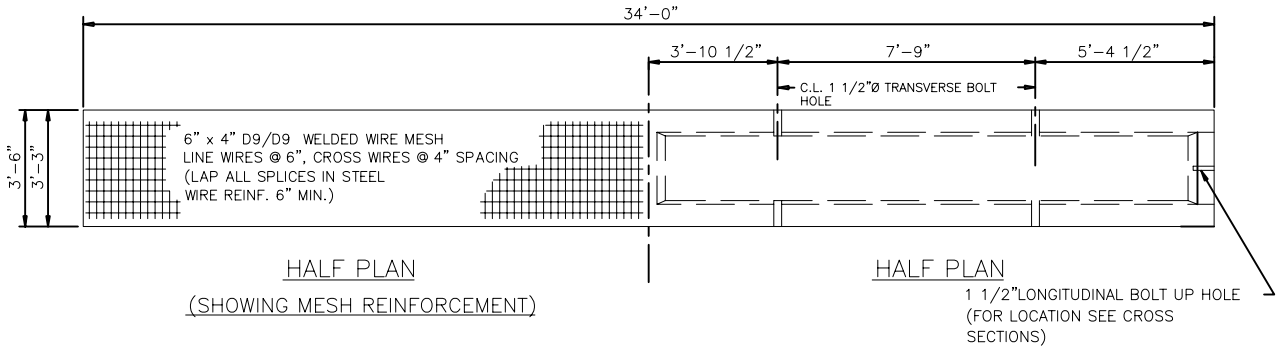

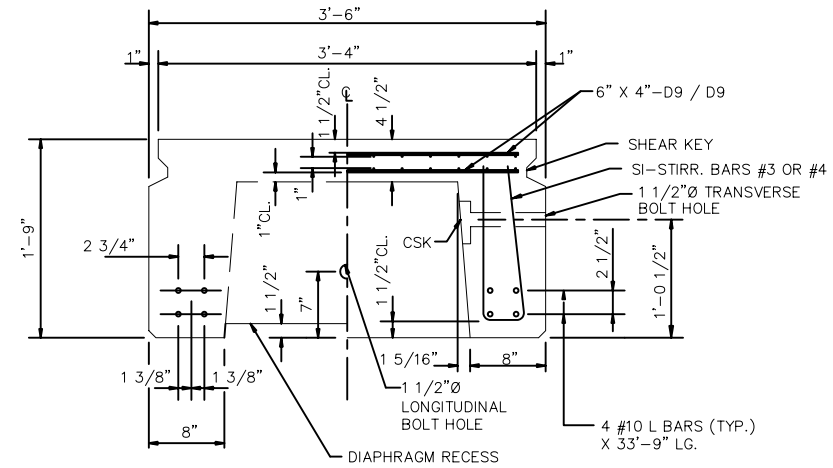

BRIDGE CHANNEL TYPE 1

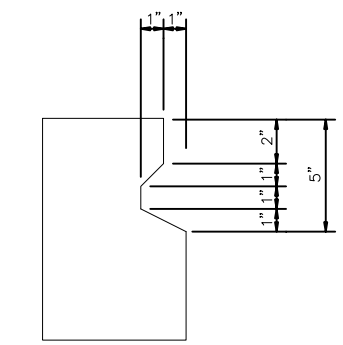

SHEAR KEY DETAIL

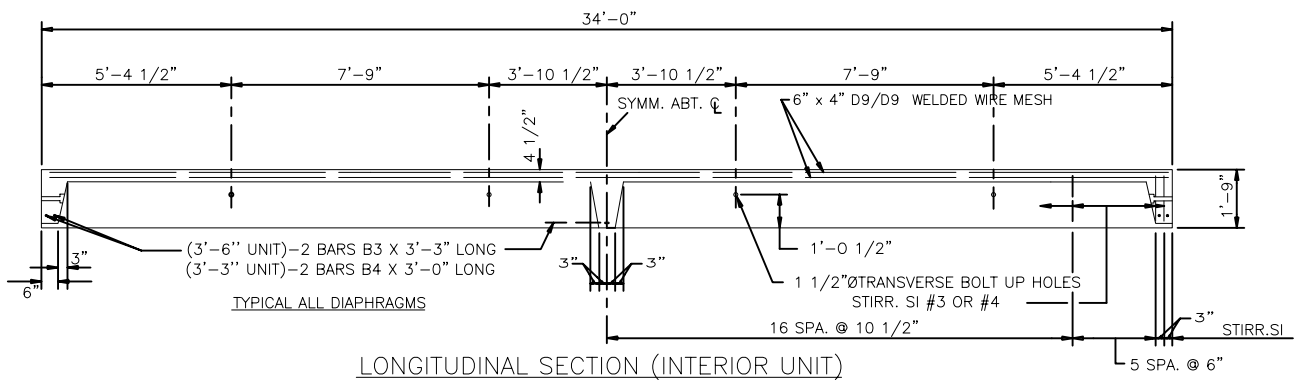

LONGITUDINAL SECTION (INTERIOR UNIT)

TYPE 1

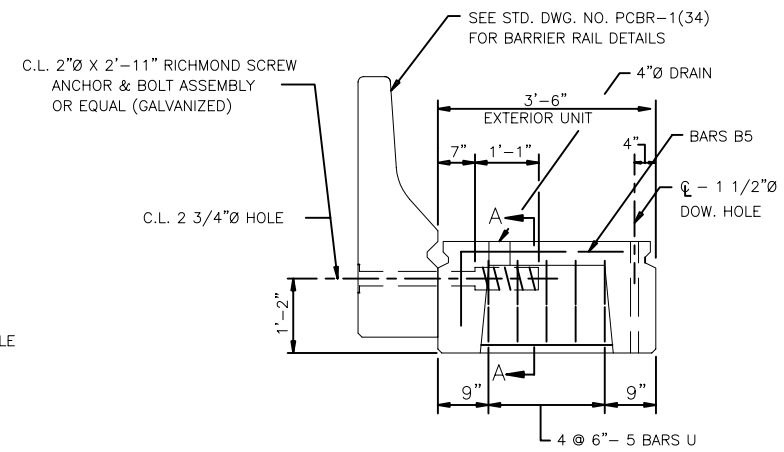

BARRIER RAIL CONNECTION DETAIL

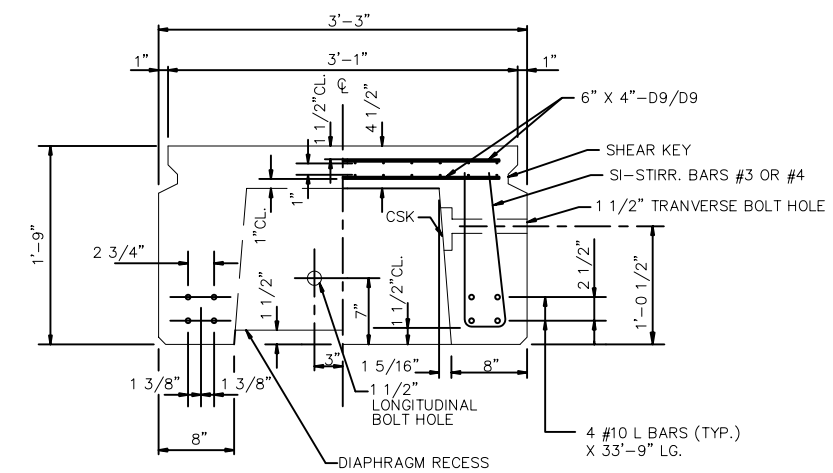

BRIDGE CHANNEL TYPE 1

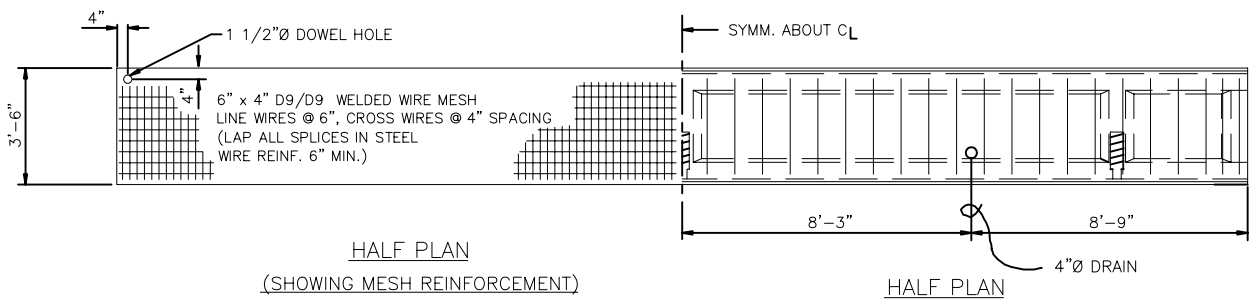

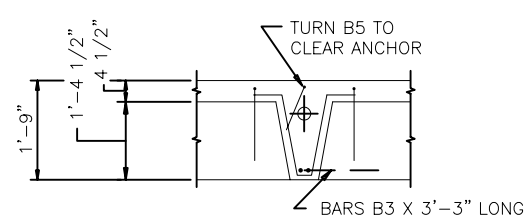

SECTION "A-A"

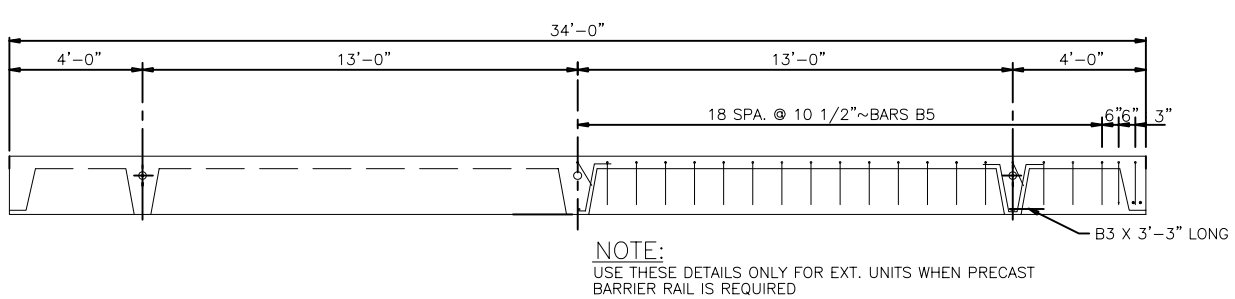

NOTE:
USE THESE DETAILS ONLY FOR EXT. UNITS WHEN PRECAST
BARRIER RAIL IS REQUIRED

LONGITUDINAL SECTION (EXTERIOR UNIT)

TYPE 2C

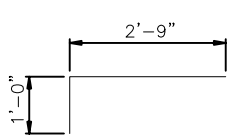

BARS B5 #3

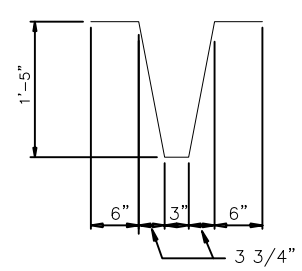

BARS U #3

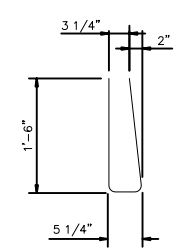

BEAM STIRRUPS BARS #3 OR #4-SI

CONECUH BRIDGE & ENGINEERING, LLC
P. O. Box 129
Troy, Alabama 36081
249 County Rd. 2227
Troy, Alabama 36079
334-566-7422

PRECAST CONCRETE BRIDGE SLABS – 34' SPANS
24', 24'-6" & 28' ROADWAYS
HS 20-44 LOADING

DATE: 7/18/03

STANDARD DWG. NO.
PC-34-2
SHEET NO. 1 OF 2